Automated Systems

1/95

2800CE-1

CIRCULAR ELASTIC ATTACHING MACHINE

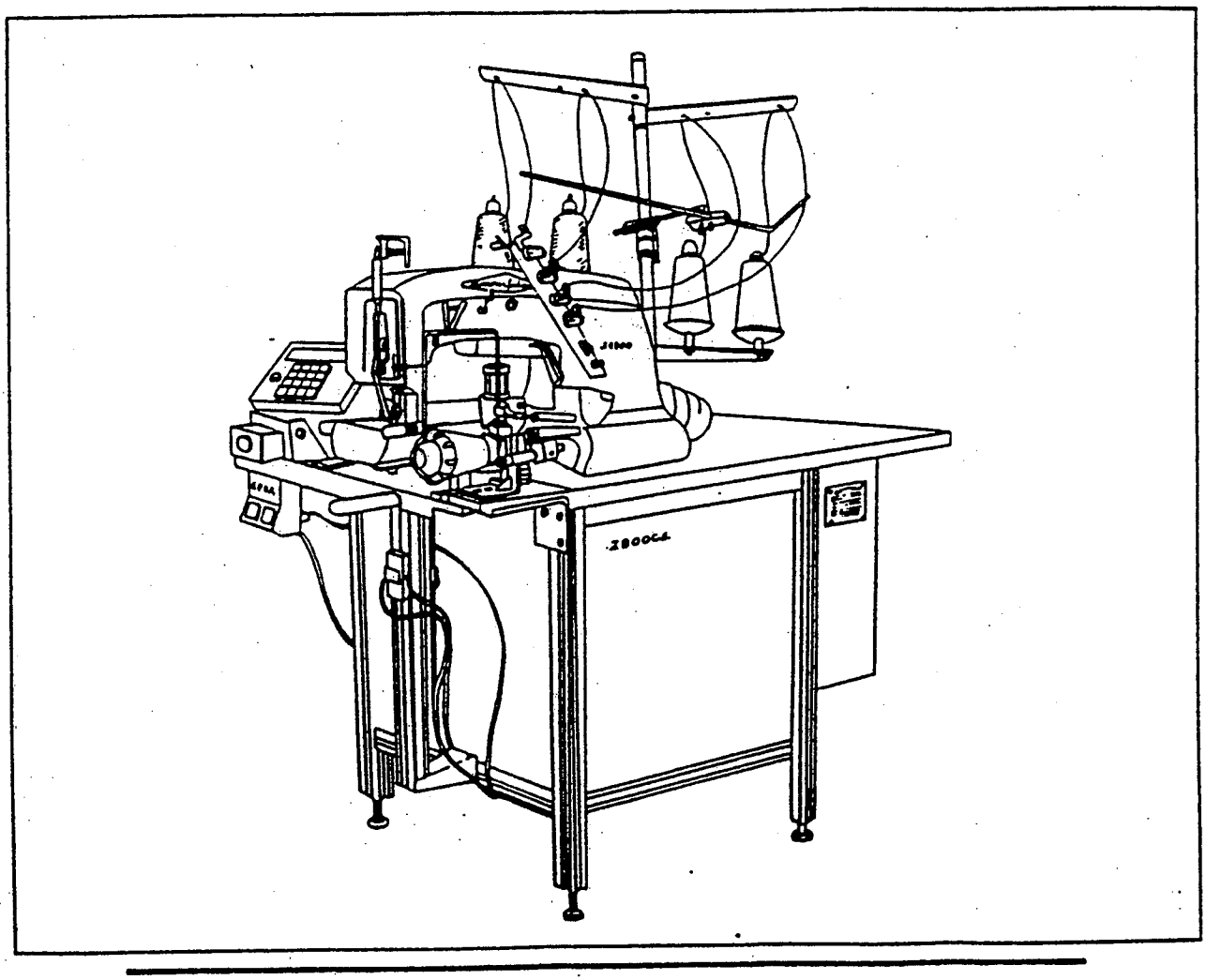

Union Special®
Industrial Sewing Equipment

UNION SPECIAL CORPORATION AUTOMATED SYSTEMS DIVISION
Customer Service: 1500Z Continental Blvd., Charlotte, North Carolina 28273, U.S.A., 1-800-443-9310
Technical Support: 13900-F South Lakes Drive, Charlotte, North Carolina 28273, U.S.A., 704-588-7193

From the library of: Diamond Needle Corp

INTRODUCTION

2800CE-12 - JANUARY 1995

This TEMPORARY catalog was produced for machine style 2800CE-1, a Circular Elastic Attaching Machine.

If you have any questions, or suggestions, please use the fax sheet provided for you on the following page. You may want to make extra copies of this fax for future use. We will make every effort to respond back to you with a reply as soon as possible.

For Technical Support call 1-704-588-7193.

For Customer Service call 1-800-443-9310 or 1-704-587-0307.
FAX: 1-800-582-4168

Respectfully,

Bob Jenkins
Assist. Manager
Technical Services/Documentation

Linda Broer
Assist. Product Specialist

From the library of: Diamond Needle Corp

Union Special
Industrial Sewing Equipment

TELE-FAX

DATE: _____

TO: BOB JENKINS

LINDA BROER

FAX #704-588-7297

PHONE #704-588-7193

YOUR CO: _____

YOUR PHONE NO. _____

YOUR FAX NO. _____

From the library of: Diamond Needle Corp

Union Special Corporation
Terms and Conditions of Sale

THE FOLLOWING TERMS AND CONDITIONS GOVERN THE RELATIONS OF BUYER AND SELLER

1. By this acknowledgement Union Special Corporation (Seller) hereby accepts your order as described on the reverse side of this form. Acceptance of orders is based on the express condition that Sellers customer (Buyer) agrees to all terms and conditions herein. These terms and conditions will govern unless Buyer notifies Seller of their unacceptability within five (5) days from the receipt of this acknowledgement of the Buyer's order. Buyer's failure to object to these terms and conditions, or acceptance of delivery by Buyer will constitute Buyer's assent to these terms and conditions. These terms and conditions represent the complete agreement of the parties, and no terms or conditions in any way adding to, modifying or otherwise changing them shall bind Seller unless made in writing by an officer of Seller. No modification of these terms and conditions shall be effected by Seller's shipment of goods following receipt of Buyer's purchase order or similar form containing printed terms and conditions conflicting with or inconsistent with in addition to the terms and conditions contained herein.

2. All prices shall be F.O.B. point of shipment unless otherwise specified, and are subject to change without notice.

3. Seller shall not be liable for default in delivery or delays in shipment for any cause beyond its reasonable control, including, but not limited to: (a) fires, floods, or other casualties; (b) wars, riots, civil commotion, governmental regulations or martial law; (c) Seller's inability to obtain materials from its usual sources of supply; (d) shortage of cars, trucks or other transportation facilities or other delays in transit; (e) existing or future strikes or labor troubles affecting production or shipment, whether involving Seller's employees of others, and regardless of the responsibility or fault on the part of the employer; (f) other contingencies of manufacture or shipment.

4. All sales tax, gross receipts and excises of any nature whatsoever now or hereafter levied by any government authority, whether federal, stat or local, upon the sale or transportation of any goods sold demonstrates why such tax is not applicable to this sale.

5. Title to goods shall pass to Buyer upon delivery thereof to the carrier. Delivery of goods to the carrier shall constitute delivery to Buyer, and thereafter such goods shall be at Buyer's risk. Any claim by Buyer against Seller for shortage or damage prior to delivery to the carrier must be made within five (5) days after receipt of goods.

6. All goods sold hereunder are warranted to be free from defects in material and workmanship for the periods indicated when sold to the first end user.

Sewing Head Assemblies (internal parts)	one year
Sewing Parts and other External Attachments	90 days
Automated Sewing Systems(excluding the above items)	90 days from installation or 180 days from invoice date whichever comes first

THIS WARRANTY IS VOID IF THE GOODS PURCHASED HAVE BEEN DAMAGED BY ACCIDENT, IMPROPER USE, UNREASONABLE USE, NEGLECT, IMPROPER OIL, IMPROPER SERVICE OR OTHER CAUSES NOT ARISING FROM DEFECTS IN MATERIAL AND WORKMAN SHIP. NO EMPLOYEE OR AGENT OF SELLER IS AUTHORIZED TO MAKE ANY PRODUCT WARRANTY OTHER THAN THE WARRANTY IN THIS PARAGRAPH.
THE FOREGOING WARRANTY IS IN LIEU OF AND EXPRESSLY EXCLUDES ALL OTHER WARRANTIES NOT EXPRESSLY SET FORTH HEREIN, WHETHER EXPRESS OR IMPLIED BY OPERATION OF LAW, INCLUDING BUT NO LIMIT TO ANY IMPLIED WARRANTIES OF MERCHANT OR FITNESS FOR A PARTICULAR PURPOSE.
Seller shall not be liable for incidental or consequential losses, damages or expenses, directly or indirectly arising from the sale, handling or use of the automated sewing system sold hereunder, and Seller's liability in any case is expressly limited to replacement (in the form originally shipped) or repair of goods not complying with this agreement, or Seller's option, to the repayment of or crediting Buyer with an amount equal to the purchase price of goods, whether claims are for breach or warranty or Seller's negligence. Any claim made by Buyer with reference to goods sold hereunder shall be deemed waived unless made by the Buyer in writing within thirty (30) days from the date the Buyer discovered, or should have discovered, any claimed breach of this warranty. Any goods claimed to be defective may be returned to seller's plant for inspection.

7. Seller reserves the right to require payment for the goods in advance, or satisfactory security, if the financial responsibility of Buyer becomes unsatisfactory to Seller. If Buyer fails to make payment in accordance with the terms of this agreement or any collateral agreement, or fails to comply with any provision hereof, Seller may at its option, and in addition to other remedies, cancel any unshipped portion of this order, Buyer to remain liable for all unpaid accounts.

8. Machines and automated systems cannot be returned, and orders for machines and automated systems once accepted cannot be cancelled without the prior written consent of Union Special. Any machines or automated systems that are returned may be subject to a restocking charge.

9. Orders for special, non standard machines and orders for special, non standard, parts (usually identified by the prefix K or L), and any machine or part that is manufactured to the Buyer's specifications, are accepted by Union Special at the sole risk of the Buyer, and cannot be cancelled under any circumstance. Such machines and parts cannot be returned for credit.

10. Standard parts can be returned at any time if they are a currently active part, unused and in new condition. Proof of purchase must accompany the return. Standard parts returned without proof of purchase or more than 60 days beyond the date they were invoiced to the Buyer will be subject to a 20% restocking charge.

11. No assistance given to Buyer by Seller in the repair or operation of the goods sold hereunder shall constitute a waiver on the part of Seller of any of the terms and conditions contained herein.

12. All sales shall be deemed to be on the terms and conditions contained above except as said terms and conditions may be modified by a distributorship agreement between the parties hereto.

13. The rights and obligations of Buyer and Seller shall be governed by the law of the State of Illinois, including the Illinois Uniform Commercial Code. Rev: 0 October 1, 1993

From the library of: Diamond Needle Corp

UNION SPECIAL AUTOMATED SYSTEMS

Training/Service and Parts Warranty

Training

Mechanic training is required on all new orders. Training time varies from one day to two (2) weeks, depending on the complexity of the unit. Training will take place at the Union Special Charlotte Service Center in Charlotte, N.C. Free tuition for mechanics training is covered for a period of ninety (90) days after machine installation. Customer is responsible for travel and living expenses of mechanic during training.
In plant training is not recommended because of distractions and noise associated with plant conditions. In the event that in-plant training is required a tuition fee of $480.00 per day will be charged in addition to all expenses Union Special trainer incurs.

Free service

Free installation is provided with every automated systems machine purchase only if a qualified mechanic has been trained prior to installation. Free service is provided for a period of ninety (90) days after a machine installation when machines are run for one eight (8) hour shift. Sixty (60) days of free service is provided for two 8 hour shifts and thirty (30) days free service for three 8 hour shifts per day. Free service is to correct machine failure due to defects in manufacturing. Normal maintenance and adjustments are not covered by warranty.

Parts

For a period of 180 days not including the sewing heads which are covered for one year (internal parts only). 3 months, 2 - 8 hour shifts; 2 months, 3 - 8 hour shifts. Parts will be warranted against defects in manufacturing. Not included are parts subject to normal wear.

Service charge

Service charges for items not under warranty:

1. Labor - $60.00 per hour, point to point.
2. Expenses - All travelling expenses are to paid for by the customer. These include:
   a.) Air transportation and car rental if needed).
   b.) Mileage for technician - $0.255/mile
   c.) Hotel lodging (if needed).
   d.) Meals (if needed)
3. Parts used for repair will be charged. The service charge is warranted for thirty (30) days after repair. Warranty of the service charge includes labor, expenses and cost of parts. Service charge warranty is against defects of workmanship or manufacturing but does not include defects due to misuse.

rev. 1/24/96 rsj

From the library of: Diamond Needle Corp

TABLE OF CONTENTS

INTRODUCTION 1

PARTS LISTS:

2884L1 FRAME ASSEMBLY 3
2884L2 SEWING HEAD MOTOR ASSEMBLY 5

2884L3 SEWING HEAD ASSEMBLY 6
KLIPP-IT CONVERSION KIT 10

2884L4 CA/TOP ROLLER ASSEMBLY 11
COARSE ALIGNER 12
FEED ROLLER ASSEMBLY 13
DRIVING UNIT 14

2884L5 TABLE/FRAME MTD. COMPONENTS 15
2884L6 PNEUMATIC PANEL ASSEMBLY 19
2884L7 CONTROL BOX ASSEMBLY 23

2884L9 ELECTRICAL ASSEMBLY 26
CONTROL DISPLAY 26
SEWING LIGHT / CABLE 29

2884L10 COVERS/WASTE REMOVAL 30
2884L11 PACK & SHIP ASSEMBLY 32

ADJUSTING INSTRUCTIONS
FIRST STITCH SENSOR ARM ADJUSTMENT 33
COURSE ALIGNER ADJUSTMENT 34
GARMENT STYLE VARIABLE ADJUSTMENT 36
STOP BLOCK ADJUSTMENT 37

ELECTRICAL:
CONNECTION DIAGRAM FOR PNEUMATIC ASSEMBLY 38
CONTROL BOX PANEL 39
STEPPER CARD 40
CPU CONNECTIONS 41
POWER +5V/24V / E-STOP CONNECTIONS 42
POWER SUPPLY DIAGRAM 43
34700 SEWING HEAD CATALOG 44

ELECTRICAL DIAGRAMS

From the library of: Diamond Needle Corp

PARENT NUMBER: 2884L1 DESCRIPTION: ASSEMBLY, FRAME

SEQ NO.	COMPONENT	QUANTITY PER	DESCRIPTION
010	22652E20	32.	SCREW
010	661-184-1	43.	WELD NUT, SINGLE 5/16-18
010	AS47-229CC	43.	WASHER, .375 ID, .625 OD, .025
010	AS72-96	32.	FASTENER, FRAME ANCHOR
010	AS73-903-3	8.	5/16-18 HALF ROUND NUT
010	RM8020-20	4.	EXT. 8020 TYPE 3 X 19.250 LG.
010	RM8020-21	4.	EXT. 8020 TYPE 3 X 21.250 LG.
010	RM8020-40	4.	FRAME MEMBER - TYPE 5-32.44 LG
010	22642K54	8.	CAP SCREW
010	22653B10	6.	#10-32 X 5/8" H.S.H.C.S.
010	22653B12	2.	#10-32 X 3/4 H.S.H.C.S.
010	660-999A	4.	SWIVEL CASTER
010	661-126-1	4.	FOOT, LEVELING - 3/8-16
010	AS62-105	1.	TABLEBOARD
010	AS72-89A	4.	BRKT., CASTER
010	AS73-903-1	8.	10-32 HALF ROUND NUT
010	AS73-903-2	12.	1/4-20 HALF ROUND NUT
010	RM2797-2	8.	1/4-20 X 5/8 H.S.H.C.S.
010	RM3211-13	4.	1/2-13 HEX JAM NUT
010	RM3211-3	4.	3/8-16 HEX JAM NUT
010	RM3293-1	8.	1/4 F.W.
010	RM3293-2	8.	5/16 F.W.
010	RM3293-3	4.	3/8 F.W.
010	RM3293-4	4.	1/2 F.W.
010	RM3293-6	8.	#10 F.W.
010	RM3993-2	4.	1/2 H.S.L.W.
010	RM3993-3	8.	#10 H.S.L.W.
010	RM3993-5	8.	5/16 H.S.L.W.
010	RM3993-8	8.	1/4 H.S.L.W.
010	RM4551-1	4.	PAD, RUBBER-LEVELING FOOT

From the library of: Diamond Needle Corp

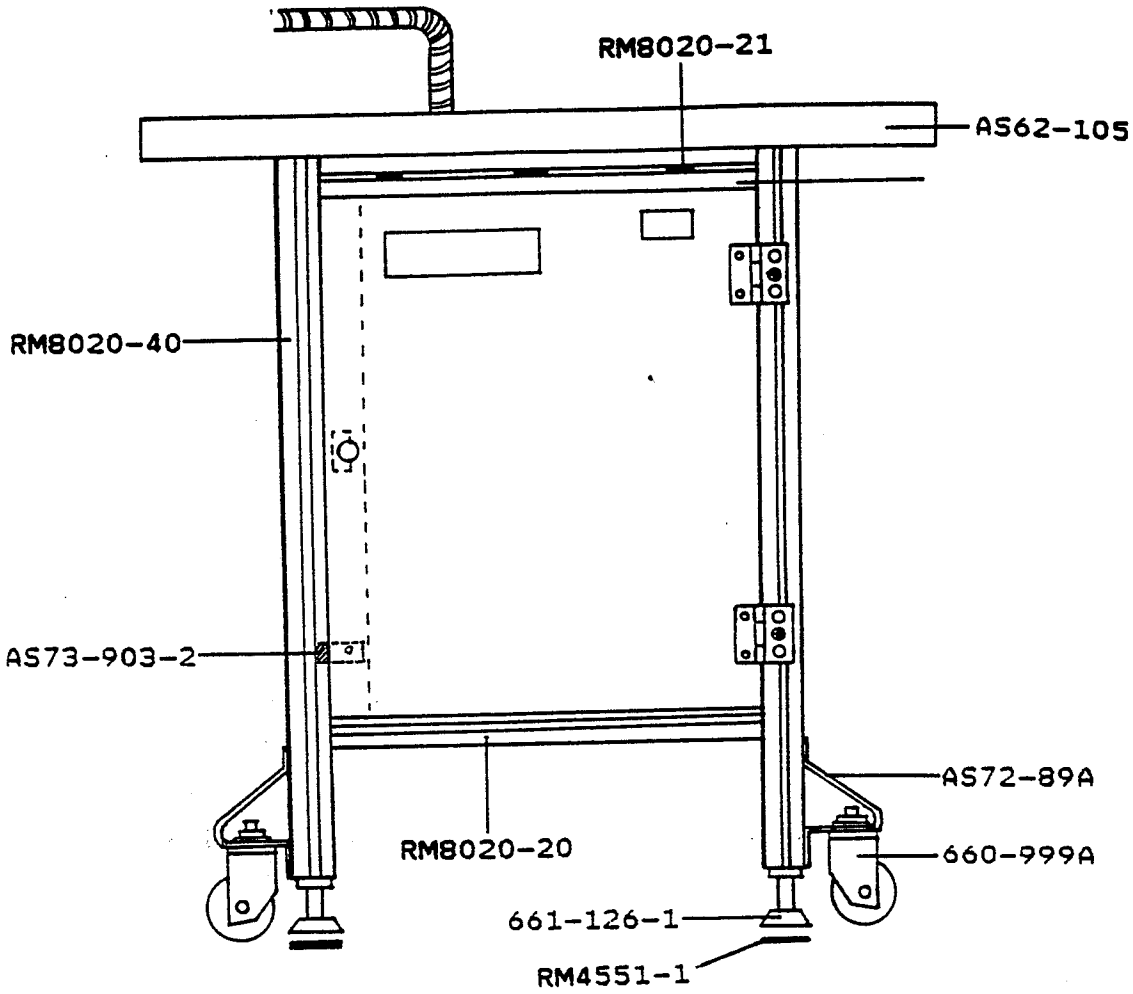

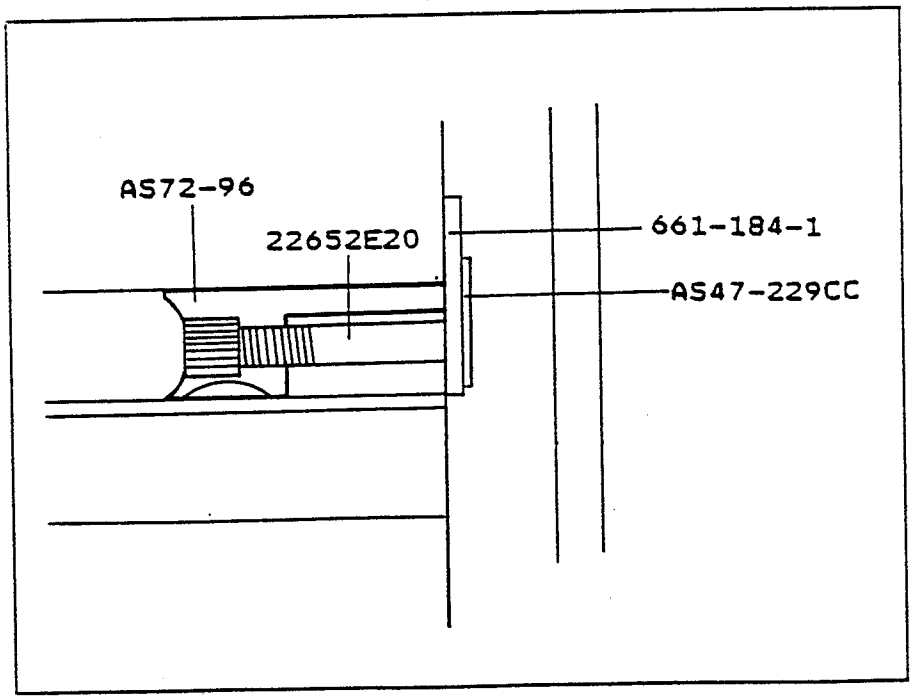

From the library of: Diamond Needle Corp

PARENT NUMBER: 2884L2 DESCRIPTION: ASSEMBLY, SEWING HEAD MOTOR

SEQ NO.	COMPONENT	QUANTITY PER	DESCRIPTION
010	670H88	1.	MOTOR DIGITAL EFKA (US80A)
010	RM2791-8	3.	5/16-18 HEX NUT
010	RM3293-2	3.	5/16 F.W.
010	RM3656-15	1.	36" V-BELT 3/8 W. 3L
010	RM3993-5	3.	5/16 H.S.L.W.

670H88
EFKA MOTOR

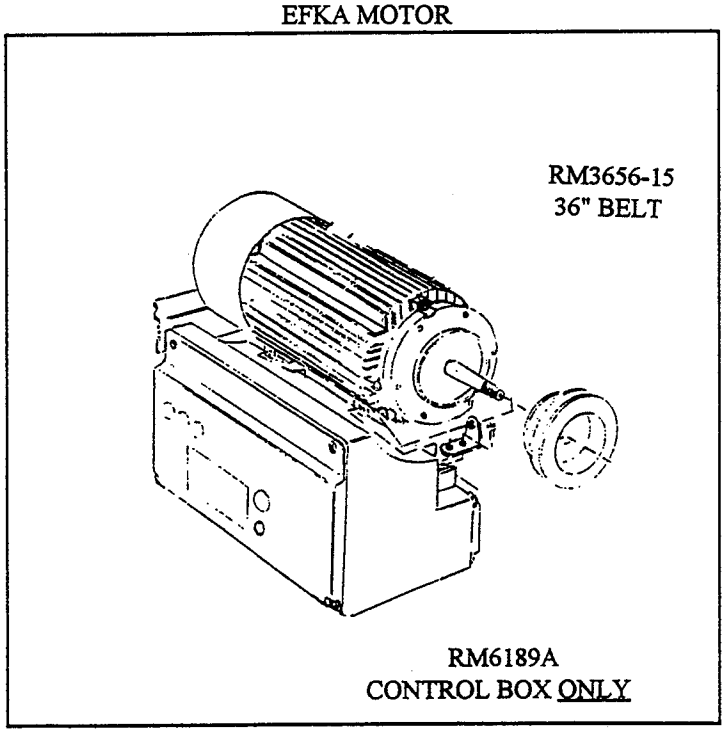

From the library of: Diamond Needle Corp

PARENT NUMBER: 2884L3 DESCRIPTION: ASSEMBLY, SEWING HEAD

SEQ NO.	COMPONENT	QUANTITY PER	DESCRIPTION
010	22652A6	1.	#8-32 X 3/8 H.S.H.C.S.
010	22652A8	2.	#8-32 X 1/2 H.S.H.C.S.
010	22652D12	2.	1/4-20 X 3/4 H.S.H.C.S.
010	22652J12	2.	#6-32 X 3/4" H.S.H.C.S.
010	22652J6	1.	#6-32 X 3/8" H.S.H.C.S.
010	22652J8	1.	#6-32 X 1/2" H.S.H.C.S.
010	22652K4	2.	#4-40 X 1/4 H.S.H.C.S.
010	22653B12	3.	#10-32 X 3/4 H.S.H.C.S.
010	22653B16	1.	#10-32 X 1 H.S.H.C.S.
010	22653B8	2.	#10-32 X 1/2 H.S.H.C.S.
010	29480ABY	1.	KLIPP-IT CONV. KIT
010	29921C	1.	PRESSER FOOT ASSEMBLY
010	34302AA	1.	SLIDE - 34700
010	34364B	1.	SUPPORT
010	34375	1.	GUARD, BELT - 34700
010	34700KTBZ3361E	1.	34700 SWNG HD W/ALGNNG FD DOG
010	34771N	1.	HOLDER - UPPER KNIFE
010	660-904E	2.	BEARING, 3/8 ID X 7/8 OD
010	661-68T	1.	SPRG, COMP-.120 OD.-.313FL.
010	670B189	1.	SENSOR,FIBOPT.BANNER #SM312FPH
010	670B190	1.	SWTCH,SUB-MIN CHERRY#DH1C-B1PA
010	670B198	1.	SENSOR,COUNTER-OMRON#EE-SPY402
010	670B199	1.	CONNECTOR,SENSOR-OMRON#EE-1003
010	670E1189	1.	CABLE, SAFETY SWITCH
010	670H175	1.	MOTOR, STEPPER - FEED DOG
010	671-102C	2.	FLOW CONTROL VALVE METER-OUT
010	671-102D	2.	ELBOW- FLOW CONT.-1/8M.X1/4T.
010	671A173	1.	AIR CYLINDER
010	671A203	1.	CYLINDER, BIMBA #020.5 DXP
010	671A204	1.	CYLINDER, BIMBA #011.5 NR
010	671F81C	2.	FITTING, PUSH IN-1/4" TUBE
010	671F82F	1.	FITTING, PUSH IN 5/32" TUBE
010	671F86C	1.	5/32" TUBE "Y" COUPLING
010	99343F	2.	SCREW
010	99371C	1.	PIN
010	A10173B	1.	LOOPER - MODIFIED
010	A10302A	1.	PLATE, CLOTH - 34700
010	A10305E16	1.	ASSEMBLY, PRESSER FOOT - 34700
010	AS62-302	1.	BAR-KNIFE THROW OUT
010	AS62-303	1.	SPACER
010	AS62-304	1.	BRACKET, CYLINDER
010	AS62-305	1.	BLOCK, BAND STOP
010	AS62-311	1.	ASS'Y., BASE PLATE / BLOWER
010	AS62-313	1.	BLOCK, CYLINDER RETAINING
010	AS62-314 A	1.	CA FLAG TOP
010	AS62-315 A	1.	CA FLAG BOTTOM
010	AS62-317	1.	BAND LIMITER
010	AS62-318	1.	SLIDE,MODIFIED(R/W US#34302AA)
010	AS62-321	1.	BRACKET, IDLER ROLLER
010	AS62-322	1.	SHAFT, TAKE UP ROLLER
010	AS62-323	1.	GUIDE, MATERIAL

From the library of: Diamond Needle Corp

PARENT NUMBER: 2884L3 DESCRIPTION: ASSEMBLY, SEWING HEAD

SEQ NO.	COMPONENT	QUANTITY PER	DESCRIPTION
010	AS62-324	1.	BASE, TAKE-UP
010	AS62-325	1.	SLEEVE, TAKE-UP
010	AS62-331	1.	BODY, SWITCH
010	AS62-332	1.	PIN, S.S.
010	AS62-333	1.	GUIDE, MATERIAL
010	AS62-334	1.	BRACKET, START/SAFETY SWITCH
010	AS62-341	1.	TUBE, VACUUM
010	AS62-342	1.	ADAPTER
010	AS62-351	1.	COVER, SEW HEAD
010	AS62-352	1.	BASE, DPF MTG.
010	AS62-353	1.	BLOCK, CAM
010	AS62-354	1.	PLATE, ROD END
010	AS62-355	1.	CAM, PLATE
010	AS62-356	1.	FOOT, BASE
010	AS62-357	1.	GUARD, DPF
010	AS62-358	1.	SLIDE, PIN
010	AS62-359	1.	BLOWER, DPF
010	AS62-360	1.	ASS'Y.,PRESSER FOOT
010	AS62-361	1.	BLOWER, THREAD
010	AS62-370	1.	GUARD, BELT (REWORK US34375)
010	AS62-371	1.	BRACKET, NEEDLE UP SENSOR
010	AS62-375	1.	PLATE, CLOTH (REWORK #A10302A)
010	AS62-385	1.	HOLDER, UPPER KNIFE
010	AS62-390	1.	SUPPORT (REWORK #34364A)
010	AS62-391	1.	GUARD, STEPPER MOTOR
010	AS62-392	1.	PLATE, STEPPER MOTOR MTG.
010	AS62-393	1.	PLATE, MOTOR - CLAMP - UPPER
010	AS62-394	1.	PLATE, MOTOR - CLAMP - LOWER
010	AS62-395	1.	COLLAR, SPRING
010	AS62-396	1.	SPRING, MODIFIED
010	J79J	2.	SCREW, FILL HD-.183-32 X 27/64
010	RM2747-2	3.	ITLW - 6
010	RM2747-4	1.	ITLW - 10
010	RM2747-6	2.	ITLW - 8
010	RM2791-1	6.	#8-32 HEX NUT
010	RM2791-2	3.	#6-32 HEX NUT
010	RM2791-4	2.	#4-40 HEX NUT
010	RM2791-7	2.	#10-32 HEX NUT
010	RM2809-5	1.	BRACKET, CYLINDER
010	RM2815-4	2.	#6-32 X 3/4 H.S.H.C.S.
010	RM2983B	2.	#4 F.W. (BRASS)
010	RM2984E	2.	#4-40 X 5/8 H.S.H.C.S.
010	RM3144-12	2.	RING, RETAINING - EXT. - 3/8"
010	RM3144-23	1.	E-RING, TRUARK 5133-06
010	RM3293-1	2.	1/4 F.W.
010	RM3293-5	7.	#8 F.W.
010	RM3293-6	3.	#10 F.W.
010	RM3293-7	4.	#6 FLAT WASHER
010	RM3306-3	1.	#10-32 X 3/8 H.S.H.C.S.
010	RM3437-14	2.	PIN, DOWEL-.188 DIA.-.750LG.
010	RM3437-15	1.	PIN, DOWEL-.188 DIA.-.500 LG.

From the library of: Diamond Needle Corp

PARENT NUMBER: 2884L3

DESCRIPTION: ASSEMBLY, SEWING HEAD

SEQ NO.	COMPONENT	QUANTITY PER	DESCRIPTION
010	RM3595	1.	QUICK EXHAUST
010	RM3680-3	2.	#6-32 X 5/8 BUT. H.C.S.
010	RM3680-4	1.	#6-32 X 3/16 LG BUT. HCS
010	RM3993-3	6.	#10 H.S.L.W.
010	RM3993-4	4.	#8 H.S.L.W.
010	RM3993-6	4.	#6 H.S.L.W.
010	RM3993-7	2.	#4 H.S.L.W.
010	RM3993-8	2.	1/4 H.S.L.W.
010	RM4405-1	4.	6-32 X 1/2 H.S.F.H.C.S.
010	RM4405-2	2.	6-32 X 5/16 H.S.F.H.C.S.
010	RM4523-2	2.	#10-32 X 3/8 H.S.BUT.H.C.S.
010	RM4691-1	2.	SFHS - 2-56 X .188LG.
010	RM6528	1.	ASS'Y,PCB-LOOPER THREAD BREAK
010	RM6545	3.	BANNER#P1U260U .020 F.O. CABLE

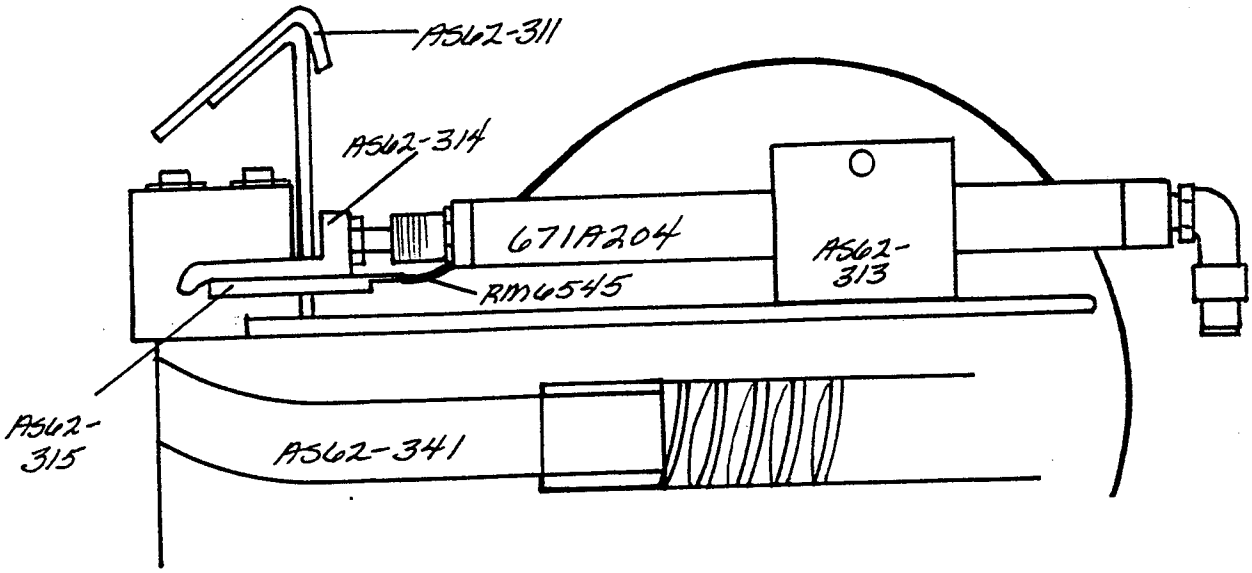

From the library of: Diamond Needle Corp

DIFFERENTIAL FEED DOG ASSEMBLY
(2800CE-1)

A10309

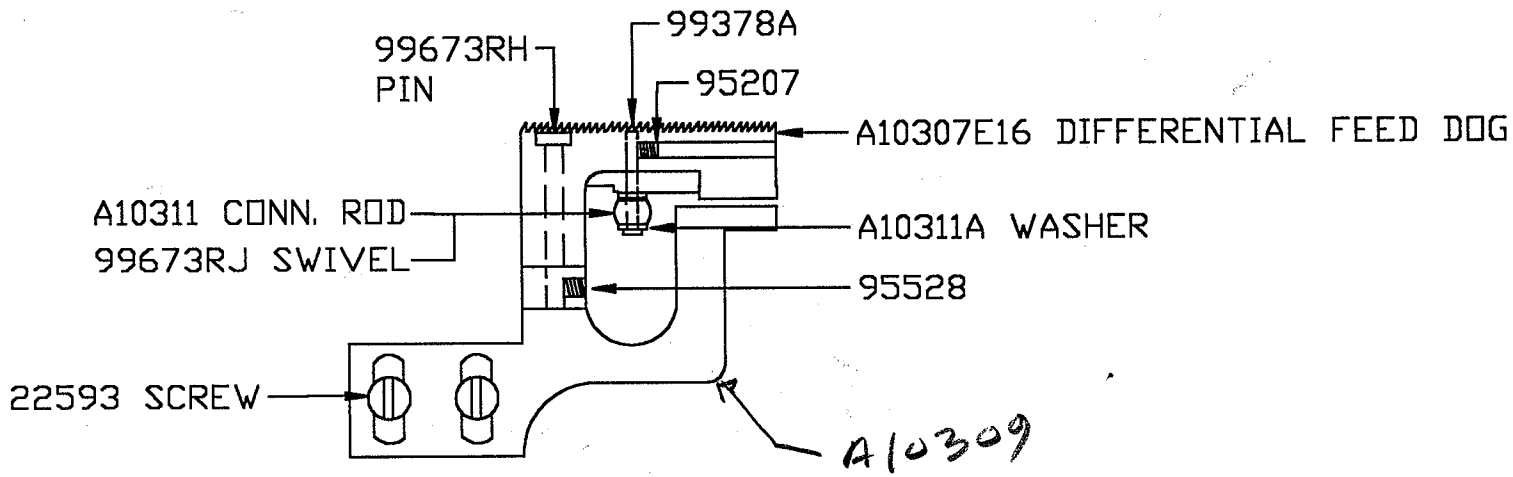

STEPPER END

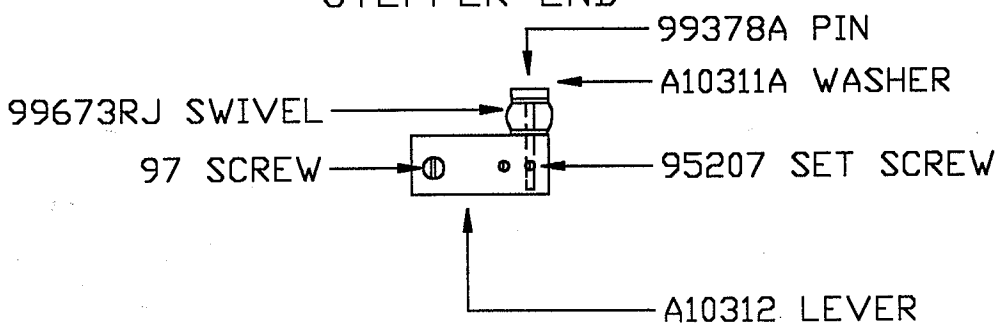

From the library of: Diamond Needle Corp

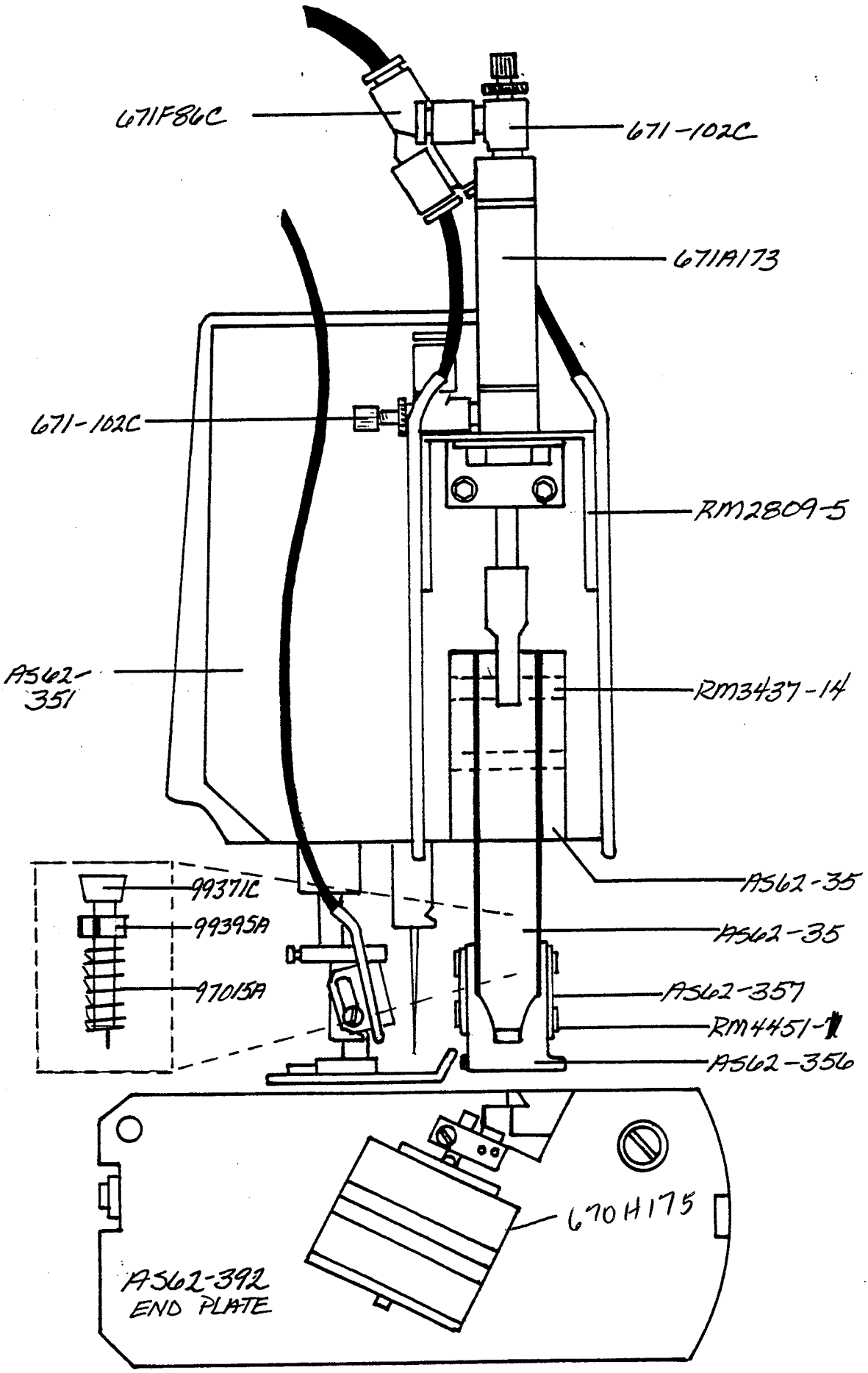

From the library of: Diamond Needle Corp

PARENT NUMBER: 29480ABY DESCRIPTION: KLIPP-IT CONV. KIT

SEQ NO.	COMPONENT	QUANTITY PER	DESCRIPTION
010	141	2.	SCREW
010	22652A10	2.	#8-32 X 5/8 H.S.H.C.S.
010	671-102A	2.	FLOW CONTROL ELBOW
010	671-109A	1.	4 WAY MAC VALVE
010	671A96	1.	KLIPP-IT DRIVE CYL.
010	671B37A	4.	TUBING, 4MM O.D. (.157")
010	671F82C	3.	5/32" X 1/8 NPT KQL MALE ELBOW
010	671F82J	1.	5/32 T UNION TEE
010	92121	1.	SCREW
010	998-356C	1.	SWITCH,PROXIMITY KLIPP-IT
010	AS11-28	1.	CYLINDER MTG. BRKT.
010	AS11-29	1.	LEVER
010	AS11-30	1.	CLEVIS BRKT.
010	AS11-31	1.	CLEVIS PIN (KLIPP-IT)
010	AS11-36	1.	CYLINDER STOP
010	B093A	1.	CARTON #28
010	RM2791-7	1.	#10-32 HEX NUT
010	RM2964B	2.	GASKET
010	RM2984C	2.	#4-40 X 1 1/4 H.S.H.C.S.
010	RM2993-5	1.	CLEVIS,(7/16 CYL.)
010	RM3001B	1.	SPRING WASHER
010	RM3144-4	2.	E RING
010	RM3293-1	2.	1/4 F.W.
010	RM3293-5	2.	#8 F.W.
010	RM3993-4	2.	#8 H.S.L.W.
010	RM3993-8	2.	1/4 H.S.L.W.

From the library of: Diamond Needle Corp

PARENT NUMBER: 2884L4 DESCRIPTION: ASS'Y,CA/TOP ROLLER/UNLOAD

SEQ NO.	COMPONENT	QUANTITY PER	DESCRIPTION
010	AS62-444	1.	BRACKET, EYE/START SWITCH
010	AS62-445	1.	ROLLER, FRONT
010	AS62-446	1.	SLIDE, CA EYE
010	AS62-447	1.	GUIDE, CYLINDER
010	AS62-448	1.	PIN, PIVOT
010	AS62-451	1.	BRACKET, SENSOR MOUNTING
010	AS62-452	1.	RAIL, SENSOR DIN
010	RM2719-4	6.	#10 X 3/4 P.H.S.M.S. (PHILP)
010	RM2747-1	4.	ITLW - 4
010	RM2747-11	3.	ITLW - 5
010	RM2747-2	4.	ITLW - 6
010	RM2747-6	4.	ITLW - 8
010	RM2791-2	2.	#6-32 HEX NUT
010	RM2791-3	2.	1/4-20 HEX NUT
010	RM2791-6	1.	3/8-16 HEX NUT
010	RM2791-8	1.	5/16-18 HEX NUT
010	RM2797-2	2.	1/4-20 X 5/8 H.S.H.C.S.
010	RM2805-2	2.	BHMS - 6-32 X 1
010	RM2808-1	1.	#6-32 X 1/4 H.S.S.S. CUP POINT
010	RM2993-7	1.	CLEVIS W/NUT
010	RM3144-1	4.	E RING
010	RM3293-1	6.	1/4 F.W.
010	RM3293-2	3.	5/16 F.W.
010	RM3293-3	1.	3/8 F.W.
010	RM3293-6	3.	#10 F.W.
010	RM3293-7	4.	#6 FLAT WASHER
010	RM3306-3	3.	#10-32 X 3/8 H.S.H.C.S.
010	RM3993-3	3.	#10 H.S.L.W.
010	RM3993-4	2.	#8 H.S.L.W.
010	RM3993-5	3.	5/16 H.S.L.W.
010	RM3993-6	6.	#6 H.S.L.W.
010	RM3993-8	4.	1/4 H.S.L.W.
010	RM4330-2	3.	5/16-18 X 3/4 H.S.H.C.S.
010	RM4379-1	6.	#8-32 X 3/8 H.S.FL.H.C.S.
010	RM4414-1	5.	8-32 X 1/2 H.S.BUT.H.C.S.
010	RM4414-2	1.	8-32 X 3/8 H.S.BUT.H.C.S.
010	RM4420AF	2.	BRG, SLV-.250ID,.375OD,.625LG
010	RM4430-2	1.	3/8-16 X 1 H.S.H.C.S.
010	RM4451-3	4.	BHMS - 4-40 X 5/8
010	RM4594-1	3.	#10-32 X 1/4 LG UNDERCUT FHMS
010	RM4693-1	3.	BHCS - 5-40 X 3/8"
010	RM6225	1.	CBLE FIBER UNIT KEYENCE#FU-35A
010	RM6226	1.	LENS KEYENCE #F-3HA
010	RM6227B	1.	SENSOR AMPLIFIER "B"
010	RM6547	1.	BANNER#PIT46U .04-M4 F.O.CABLE

From the library of: Diamond Needle Corp

PARENT NUMBER: 2884L4 DESCRIPTION: ASS'Y,CA/TOP ROLLER/UNLOADER

SEQ NO.	COMPONENT	QUANTITY PER	DESCRIPTION
010	22650CK3	2.	#4-40 X3/16 H.S.C.P.S.S.
010	22652D20	2.	1/4-20 X 1 1/4 H.S.H.C.S.
010	22652D24	1.	1/4-20 X 1 1/2 H.S.H.C.S.
010	22652D8	2.	1/4-20 X 1/2 H.S.H.C.S.
010	22652J4	1.	#6-32 X 1/4" H.S.H.C.S.
010	22652J6	5.	#6-32 X 3/8" H.S.H.C.S.
010	22652J8	2.	#6-32 X 1/2" H.S.H.C.S.
010	22657C8	2.	#10-32 X 1/2 H.S.F.H.C.S.
010	40-50	1.	WASHER
010	40C193	4.	THRUST RACE
010	661-237	1.	CLAMP, TOGGLE - NO. 602
010	670B189	1.	SENSOR,FIBOPT.BANNER #SM312FPH
010	671-102	2.	FLOW CONTROL VALVE
010	671-102C	4.	FLOW CONTROL VALVE METER-OUT
010	671-102D	2.	ELBOW- FLOW CONT.-1/8M.X1/4T.
010	671-113A	3.	FLOW CONTROL
010	671A205	1.	CYLINDER, BIMBA #012-D
010	671A206	1.	RTRY ACTUATOR SMC#NCRB1BW1590S
010	671A207	1.	RTRY.ACTUTR SMC#NCRB1BW20-180S
010	671A208	1.	CYLINDER, BIMBA #093-D
010	671A209	1.	CYLINDER, BIMBA #061-DXP
010	671F81C	2.	FITTING, PUSH IN-1/4" TUBE
010	671F82F	4.	FITTING, PUSH IN 5/32" TUBE
010	671F82G	4.	MALE CONNECTOR
010	671F86B	1.	1/4 HOSE "Y" CONNECTOR
010	671F86C	1.	5/32" TUBE "Y" COUPLING
010	AS47-229BH	1.	WSHR, ISO-.344ID,.750OD,.125TK
010	AS47-799C	1.	STUD, SPECIAL (RM4396)
010	AS60-175	2.	SCREW, SPECIAL #4-40 X 1-3/4
010	AS62-411	1.	SUPPORT, MOUNTING
010	AS62-412	1.	PLATE
010	AS62-413	1.	LOCK
010	AS62-414	1.	HINGE
010	AS62-415	2.	COLLAR, CLAMP
010	AS62-416	2.	BUMPER, CA BASE
010	AS62-421	1.	BRACKET, CA MTG.
010	AS62-422	1.	COARSE ALIGNER(REWORK#92865B)
010	AS62-423	1.	CAP
010	AS62-424	1.	BLOCK, CLAMP SUPPORT
010	AS62-425	1.	PLATE, MATERIAL GUIDE
010	AS62-431	1.	BRCKT,STITCH SENSOR/SEWING ARM
010	AS62-432	1.	CLAMP, END OF SEW SENSOR
010	AS62-433	1.	BRKT., END OF SEW SENSOR
010	AS62-434	1.	BLOWER
010	AS62-435	1.	SWING ARM
010	AS62-436	1.	BLOCK, CYLINDER ADJUSTING
010	AS62-437	1.	COUPLING, SHAFT
010	AS62-438	1.	BLOCK, STOP
010	AS62-441	1.	CHANNEL, ROLLER
010	AS62-442	1.	BRACKET, TOP ROLLER
010	AS62-443	1.	PIN, PIVOT

From the library of: Diamond Needle Corp

PARENT NUMBER: AS62-422 DESCRIPTION: COARSE ALIGNER (REWORK#92865B)

SEQ NO.	COMPONENT	QUANTITY PER	DESCRIPTION
010	92865AA	1.	BOLT
010	92865AC	1.	CONE CAP
010	92865AD	1.	COVER
010	92865AE	1.	TUBE
010	92865AF	1.	CAP
010	92865B	1.	FEED ROLLER ASSY.
010	92865BB	1.	BUSHING
010	92865BD	1.	COUPLING
010	92865BM	1.	SUPPORT
010	AS62-423	1.	CAP
010	AS62-426	1.	BUSHING,FEED ROLLER(R/W92865BB
010	AS62-427	1.	COUPLING,SHAFT(REWORK 92865BD)
010	AS62-428	1.	DAM, AIR
010	AS62-429	1.	SUPPORT, PURGE(REWORK 92865BM)
010	AS62-460	1.	GASKET, PURGE
010	RM4598-1	1.	SPHMS-M6 X 20MM

From the library of: Diamond Needle Corp

PARENT NUMBER: 92865B DESCRIPTION: FEED ROLLER ASSY.

SEQ NO.	COMPONENT	QUANTITY PER	DESCRIPTION
010	22653D16	1.	1/4-28 X1 H.S.H.C.S.
010	660-269D	1.	QUAD RING
010	670H161	1.	MOTOR, STEPPER 1.5 AMP
010	670H162	1.	MOTOR,STEPPER 1.5 AMP W/PULLEY
010	92865AA	1.	BOLT
010	92865AB	1.	CONE
010	92865AC	1.	CONE CAP
010	92865AD	1.	COVER
010	92865AE	1.	TUBE
010	92865AF	1.	CAP
010	92865AL	1.	SUPPORT BEARING
010	92865BD	1.	COUPLING
010	92865BH	1.	SHANK
010	92865BJ	1.	WDRF KEY
010	92865BM	1.	SUPPORT
010	92865BQ	1.	COVER
010	92866B	1.	DRIVING UNIT
010	95290	1.	NUT
010	95408D	1.	SCREW
010	95516A	2.	SET SCREW M4 X 4
010	95657A	8.	SCREW M4X10
010	95657C	4.	SCREW
010	95662	1.	SCREW
010	95860A	3.	SCREW
010	95956	1.	WASHER
010	999-233F	1.	TIMING BELT
010	999-313K	2.	NEEDLE BEARING
010	DZ34871	1.	INSTRUCTIONS

From the library of: Diamond Needle Corp

PARENT NUMBER: 92866B DESCRIPTION: DRIVING UNIT

SEQ NO.	COMPONENT	QUANTITY PER	DESCRIPTION
010	92865AK	1.	REDUCER
010	92865BA	1.	GRIPPER ROLLER SHAFT 93800
010	92865BB	1.	BUSHING
010	92865BE	1.	TRANSPORT ROLLER DRIVE GEAR
010	92865BG	1.	FRONT TRANSPORT ROLLER DISC
010	92866AA	1.	ROL DRIVE ASSM
010	92866AA2	1.	COVER
010	92866AC	1.	HELICAL GEAR
010	92866AD	10.	GRIP ROLLER
010	92866BA1	1.	HOLLOW SHAFT
010	95409	5.	SCREW
010	95516A	2.	SET SCREW M4 X 4
010	96161D	5.	WASHER
010	96280	3.	'E'CLIP-HELICAL GEAR 93800BHA
010	96527A	1.	PARALLEL PIN
010	96856A	2.	PIN FOR 93800 GRIPPER SHAFT
010	999-313-9.8	10.	NEEDLE ROLLER
010	999-81A	2.	BALL BEARING

From the library of: Diamond Needle Corp

PARENT NUMBER: 2884L5 DESCRIPTION: COMPONENTS, TABLE/FRAME MTD

SEQ NO.	COMPONENT	QUANTITY PER	DESCRIPTION
010	21101W4	1.	THREAD STAND
010	22651AB4	1.	#10-32 X 1/4 H.S.S.S.FL.PT.
010	22652A8	2.	#8-32 X 1/2 H.S.H.C.S.
010	22652D6	2.	1/4-20 X 3/8 H.S.H.C.S.
010	22652D8	4.	1/4-20 X 1/2 H.S.H.C.S.
010	22653B8	22.	#10-32 X 1/2 H.S.H.C.S.
010	660-902K	1.	COLLAR, 3/16 DIA
010	660-904E	2.	BEARING, 3/8 ID X 7/8 OD
010	670B142C	1.	SWITCH, E-STOP, MAINTAINED
010	670B172	1.	SENSOR, RETROREFLECTIVE
010	670B191	1.	SENSOR,THRU BEAM OMRON#EE-SC3M
010	670B206	1.	SCALE SENSOR ASSEMBLY
010	670B81A	1.	PUSH BUTTON SWITCH
010	670E13	1.	BUSHING
010	671-102C	1.	FLOW CONTROL VALVE METER-OUT
010	671-102D	2.	ELBOW- FLOW CONT.-1/8M.X1/4T.
010	671A210	1.	CYL-BAND MOSIER#RCB-2-L(1)KX15
010	671A211	1.	CYLINDER, BIMBA #018-D
010	AS47-229BM	2.	WSHR, ISO-.203ID,.438OD,.125TK
010	AS47-855	1.	PUSHBUTTON GUARD
010	AS58-2195	1.	SCALE-LINEAR (SHORT)
010	AS58-2514	2.	SHEILD-SHORT LINEAR SCALE
010	AS62-322	1.	SHAFT, TAKE UP ROLLER
010	AS62-323	1.	GUIDE, MATERIAL
010	AS62-324	1.	BASE, TAKE-UP
010	AS62-325	1.	SLEEVE, TAKE-UP
010	AS62-501	1.	BRACKET, LOWER CYLINDER MNTG.
010	AS62-502	1.	BRACKET, UPPER CYLINDER MNTG.
010	AS62-503	1.	BRACKET, SENSOR MOUNT FRONT
010	AS62-504	1.	BRACKET, SENSOR MOUNT REAR
010	AS62-506	4.	CLIP, SENSOR MOUNTING
010	AS62-507	2.	PLATE, CLIP MOUNTING
010	AS62-508	1.	ANGLE, SCALE MOUNTING
010	AS62-509	1.	PLATE, SCALE BACKING
010	AS62-510	2.	STANDOFF, SCALE MOUNTING
010	AS62-511	1.	ARM, LOWER MOUNTING
010	AS62-512	1.	ARM, UPPER MOUNTING
010	AS62-514	1.	BRACKET, SCALE BLOWER
010	AS62-521	1.	BRKT, UNLOADER CYLINDER MTG.
010	AS62-522	1.	ARM, UNLOADER EGYPTIAN
010	AS62-523	1.	ROD, GUIDE
010	AS62-524	1.	BRACKET, CYLINDER RETAINING
010	AS62-530	1.	BRACKET, E-STOP/BP SENSOR
010	RM2719-3	20.	#10 X 11/2" P.H.S.M.S. (SLTD)
010	RM2747-1	2.	ITLW - 4
010	RM2747-4	10.	ITLW - 10
010	RM2747-6	4.	ITLW - 8
010	RM2787-1	4.	#12 X 1 PAN H.S.M.S.
010	RM2791-1	4.	#8-32 HEX NUT
010	RM2791-4	2.	#4-40 HEX NUT
010	RM2791-7	7.	#10-32 HEX NUT

From the library of: Diamond Needle Corp

PARENT NUMBER: 2884L5 DESCRIPTION: COMPONENTS, TABLE/FRAME MTD.

SEQ NO.	COMPONENT	QUANTITY PER	DESCRIPTION
010	RM2984F	2.	#4-40 X 1" H.S.H.C.S.
010	RM3144-12	2.	RING, RETAINING - EXT. - 3/8"
010	RM3289-5	4.	10-32 X 3/8 B.H.M.S.
010	RM3293-1	4.	1/4 F.W.
010	RM3293-5	6.	#8 F.W.
010	RM3293-6	30.	#10 F.W.
010	RM3993-3	28.	#10 H.S.L.W.
010	RM3993-4	2.	#8 H.S.L.W.
010	RM3993-8	4.	1/4 H.S.L.W.
010	RM5170-2	1.	PUSH BUTTON SWITCH CAP (BLACK)

From the library of: Diamond Needle Corp

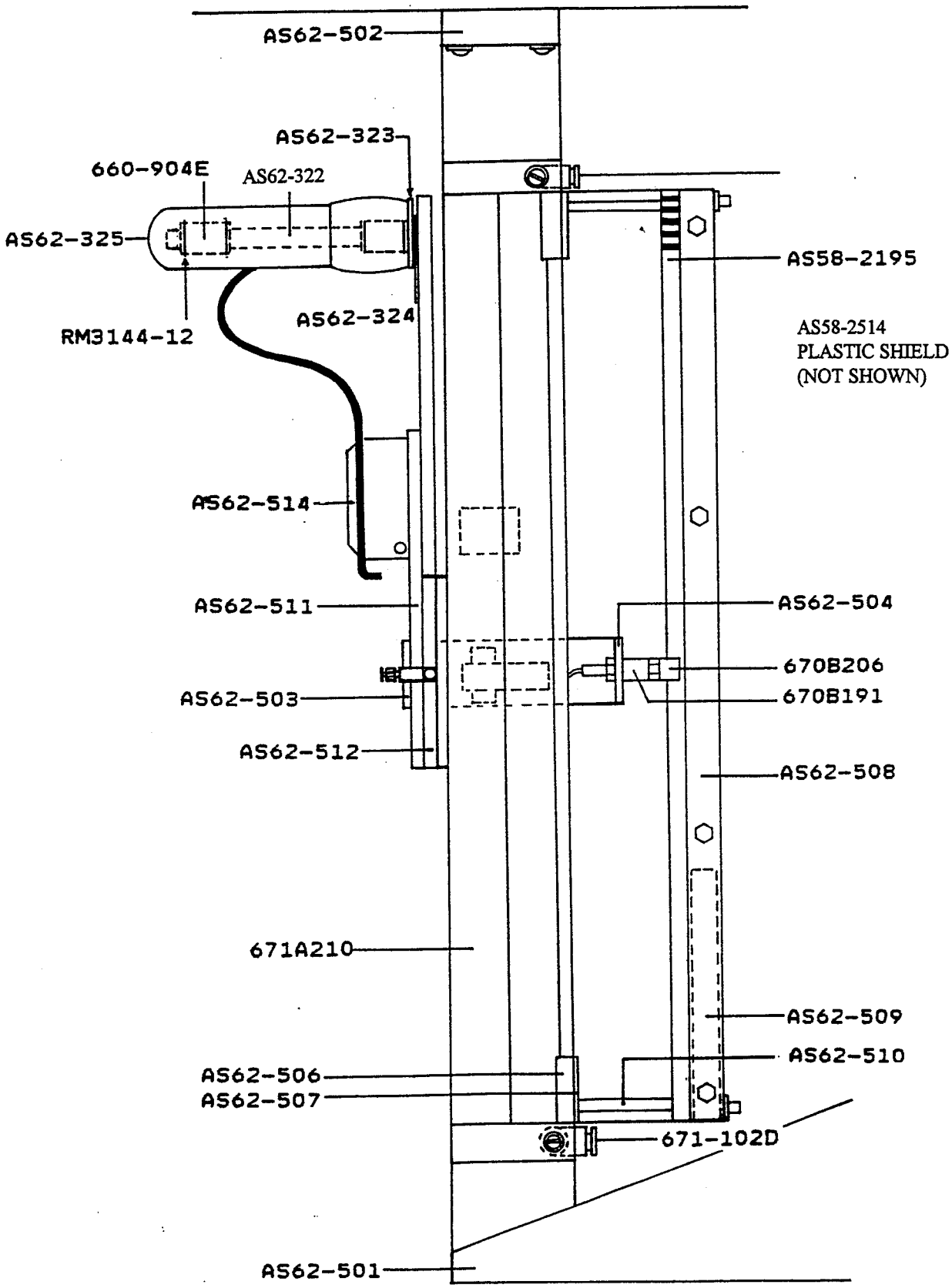

From the library of: Diamond Needle Corp

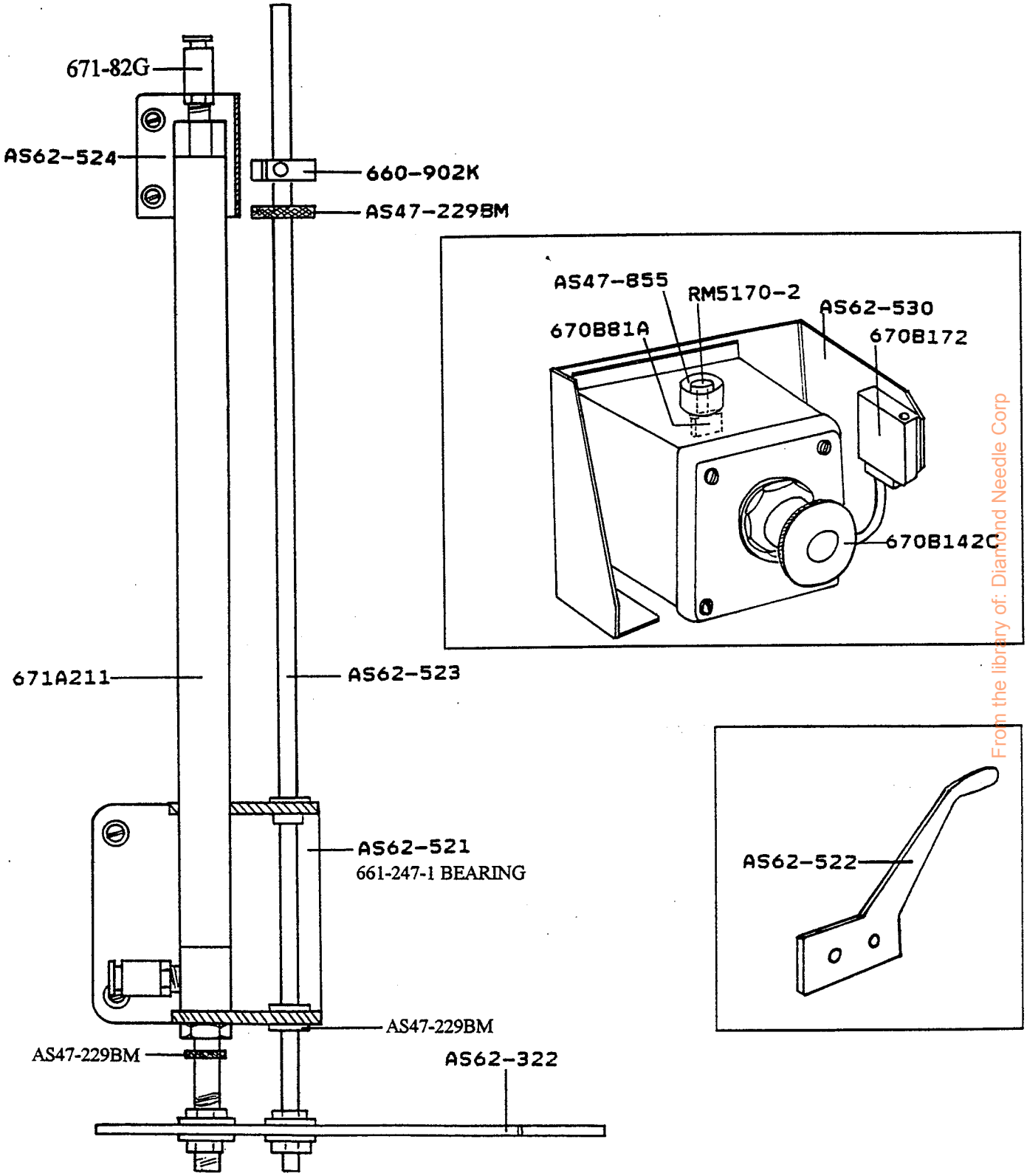

From the library of: Diamond Needle Corp

ARENT NUMBER: 2884L6 DESCRIPTION: ASSEMBLY, PNEUMATIC PANEL

SEQ NO.	COMPONENT	QUANTITY PER	DESCRIPTION
010	1314001	10.	RAW MATERIAL
010	22571F	6.	PIPE SCREW
010	22652D12	2.	1/4-20 X 3/4 H.S.H.C.S.
010	22653B12	5.	#10-32 X 3/4 H.S.H.C.S.
010	22653B16	4.	#10-32 X 1 H.S.H.C.S.
010	40-50	2.	WASHER
010	660-403	2.	MUFFLER
010	661-66	1.	MANIFOLD
010	670E2	30.	CABLE TIE
010	671-102	1.	FLOW CONTROL VALVE
010	671-103A	14.	4 WAY SOLENOID VALVE
010	671-104A	2.	VALVE STACKING KIT
010	671-127	2.	3-WAY MAC VALVE
010	671-149A	1.	FILTER, SMC
010	671-149C	1.	REGULATOR, 1/4 NPT
010	671-149F	2.	BRACKET, L-TYPE
010	671-149G	2.	GAUGE, 0-160 PSI-1/8 NPT
010	671-149J	1.	VALVE, SHUTOFF - WITH LOCKOUT
010	671B18	10.	3/8 TUBING
010	671B33A	1.	COILED HOSE
010	671B37A	72.	TUBING, 4MM O.D. (.157")
010	671B37D	40.	1/4 OD BLACK FLEXABLE TUBE
010	671C1	1.	COUPLING, HEX - 1/4 NPT.
010	671F13	1.	IMPERIAL TEE
010	671F7	1.	HEX NIPPLE
010	671F80A	7.	3/8" X 1/4 NPT KQL MALE EBLOW
010	671F80B	1.	PUSH IN MALE CONNECTOR
010	671F81A	2.	FITTING, PUSH IN-1/4" TUBE
010	671F81C	10.	FITTING, PUSH IN-1/4" TUBE
010	671F81D	9.	PUSH-IN 1/4" TUBE CONNECTOR
010	671F81E	1.	PUSH-IN BRANCH TEE
010	671F82A	9.	PUSH IN 5/32 TUBE FITTING
010	671F82C	11.	5/32" X 1/8 NPT KQL MALE ELBOW
010	671F85	1.	1/8 N.P.T. COUPLING
010	671F86C	7.	5/32" TUBE "Y" COUPLING
010	671F89B	1.	PUSH-IN FITTING PLUG (1/4)
010	671F97-1	1.	BUSHING-3/8 TO 1/4 REDUCER
010	AS62-1005	1.	ANGLE, DOOR STOP
010	AS62-601	1.	PANEL, PNEUMATICS MOUNTING
010	AS72-711	2.	STRIP, RETAINING MANIFOLD
010	LA397	1.	LABEL, GAUGE-AIR SUPPLY
010	LA398	1.	LABEL, GAUGE-MAIN AIR
010	LA435	1.	LABEL - VALVE - OUTPUT
010	RM2791-2	4.	#6-32 HEX NUT
010	RM2791-3	2.	1/4-20 HEX NUT
010	RM2791-7	12.	#10-32 HEX NUT
010	RM2805-2	4.	BHMS - 6-32 X 1
010	RM2827-15	2.	3/8-16 X 3/4 H.H.C.S.
010	RM3289-2	4.	#10-32 X 5/8 B.H.M.S.
010	RM3293-1	2.	1/4 F.W.
010	RM3293-3	2.	3/8 F.W.

From the library of: Diamond Needle Corp

PARENT NUMBER: 2884L6 DESCRIPTION: ASSEMBLY, PNEUMATIC PANEL

SEQ NO.	COMPONENT	QUANTITY PER	DESCRIPTION
010	RM3293-6	13.	#10 F.W.
010	RM3306-5	4.	#10-32 X 1 1/2 H.S.H.C.S.
010	RM3315	2.	REGULATOR STUD
010	RM3685	1.	BLOW GUN
010	RM3993-3	17.	#10 H.S.L.W.
010	RM3993-6	4.	#6 H.S.L.W.
010	RM3993-8	2.	1/4 H.S.L.W.
010	RM4098-1	2.	PILOT VALVE
010	RM6414	2.	ASS'Y., INPUT CARD FOR UNICON
010	RM6416	2.	ASS'Y., OUTPUT CARD FOR UNICON
010	RM6424C	1.	SNAPTRACK, PC BOARD MTG.-18"

From the library of: Diamond Needle Corp

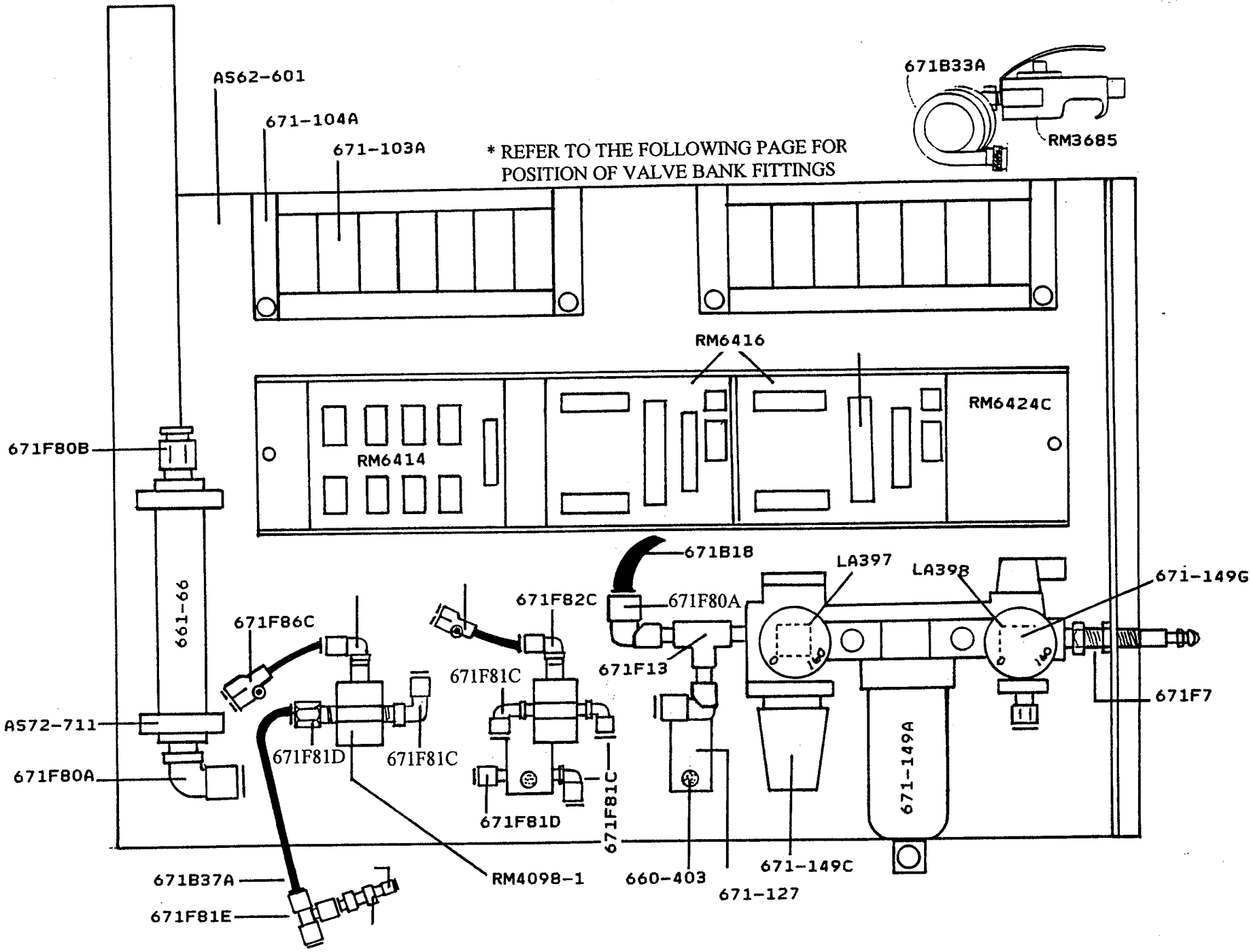

From the library of: Diamond Needle Corp

POSITION OF FITTINGS

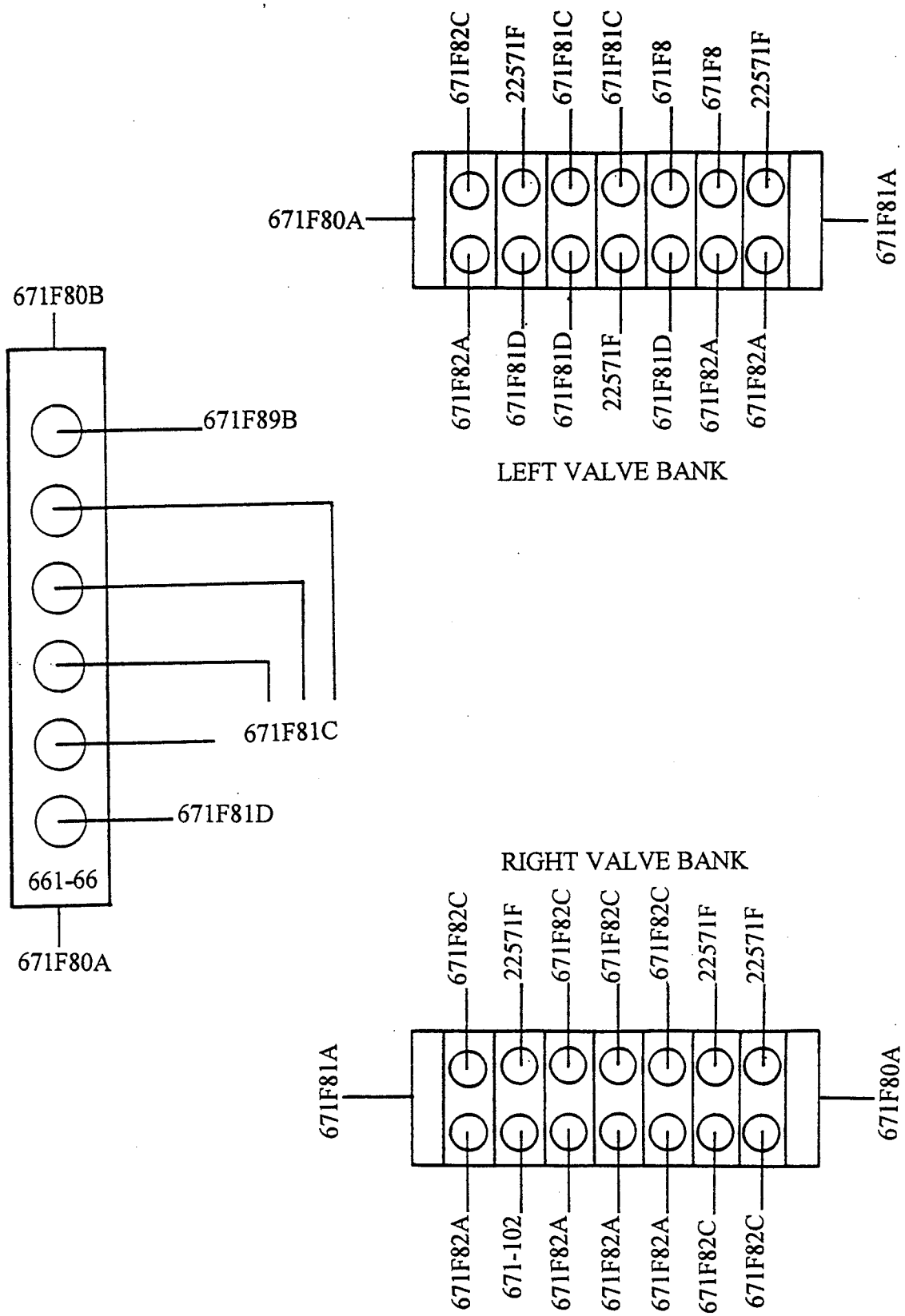

*FITTINGS MAY BE CHANGED WITHOUT NOTICE.

From the library of: Diamond Needle Corp

PARENT NUMBER: 2884L7 DESCRIPTION: ASSEMBLY, CONTROL BOX

SEQ NO.	COMPONENT	QUANTITY PER	DESCRIPTION
010	22652D12	8.	1/4-20 X 3/4 H.S.H.C.S. 023G2
010	2884W8	3.	PANEL, BLANK ASSEMBLY
010	41358G	36.	WASHER REPLACED BY 41358 014I6
010	661-59A	12.	HEYCO CONNECTOR
010	670-71	1.	POWER TRANSFORMER ASS'Y
010	670E1000E	3.	CABLE, 15 PIN 'D', RIBBON, INT
010	670E1000F	1.	CABLE,15 PIN 'D', RIBBON INT
010	670E1000G	1.	CABLE,15 PIN 'D', RIBBON, INT
010	670E1013C	1.	CABLE, POWER 220VAC TO FAN
010	670E1065B	1.	CABLE ASM, DUAL DRVR. TO E.G.
010	670E1089B	1.	CABLE, E-STOP/RESET INT
010	670E1104	1.	CABLE ASSEMBLY THD. BRK.
010	670E1161	3.	CABLE ASS'Y, 24V UNREG. DISTR
010	670E1163	1.	CABLE ASS'Y, AC SWITCH TO PWR
010	670E1164	1.	JUMPER, BRIDGE TO CAP
010	670E1165	1.	JUMPER, GROUND
010	670E1166	2.	JUMPER, POWER SUPPLY AS62
010	670E1167	3.	JUMPER, 220 VAC TO FUSE
010	670E1168A	1.	CBL ASS'Y,FEED DOG EYE INTERNL
010	670E1168B	1.	CBL ASS'Y,FEED DOG EYE INTERNL
010	670E1169	1.	CBL ASS'Y,TOLO&STITCH INTERNAL
010	670E1170	1.	CBL ASS'Y,POWER FOR EFKA MOTOR
010	670E1171	1.	CABLE ASSEMBLY, STEPPER SIGNAL
010	670E1172	1.	CBL.ASS'Y,MICRO MAIN PWR SPLY
010	670E1173	1.	CBL.ASS'Y,LOWER LOOPER INTERNL
010	670E835B	1.	CABLE, CPU TERMINAL
010	670E978B	1.	CABLE, TREADLE OUTPUT (INT)26"
010	670E986B	1.	CABLE, TREADLE OUTPUT(INT)-26"
010	670H134B	2.	FILTER ASSEMBLY, FAN
010	670H150	1.	PABST/PAN MOTOR AXEL FAN
010	670L66	1.	ENCLOSURE, E-STOP
010	AS47-1010	6.	PRINTED CIRCUIT BOARD CLIP
010	AS62-714	1.	PLATE, FEED DOG / STEPPER DRV
010	AS62-715	1.	PS PLATE
010	AS62-716	1.	AC IN PLATE
010	AS65-170	1.	PLATE, CONT. BOX MTG.
010	AS87-1015	2.	GUIDE MEMORY CARD
010	AS87-950	1.	MAXI BOX
010	AS87-951	1.	COVER, MAXI
010	AS87-957	1.	PLATE, USSCI
010	RM2747-1	22.	ITLW - 4
010	RM2747-2	2.	ITLW - 6
010	RM2747-4	6.	ITLW - 10
010	RM2747-6	18.	ITLW - 8
010	RM2805-4	2.	BHMS - 6-32 X 3/8
010	RM2813-1	4.	#8-32 X 1/4 BD.H.M.S.
010	RM2813-3	14.	#8-32 X 3/8 BD.H.M.S.
010	RM2813-4	4.	#8-32 X 1/2 BD.H.M.S.
010	RM3289-5	12.	10-32 X 3/8 B.H.M.S.
010	RM3293-1	4.	1/4 F.W.
010	RM3293-5	26.	#8 F.W.

From the library of: Diamond Needle Corp

PARENT NUMBER: 2884L7 DESCRIPTION: ASSEMBLY, CONTROL BOX

SEQ NO.	COMPONENT	QUANTITY PER	DESCRIPTION
010	RM3293-6	12.	#10 F.W.
010	RM3993-4	10.	#8 H.S.L.W.
010	RM3993-8	4.	1/4 H.S.L.W.
010	RM4320-6	3.	#10-32X1/4 FLAT HD MACH. SCREW
010	RM4432-7	8.	#8-32 ELASTIC LOCK-NUT
010	RM4451-1	16.	BHMS - 4-40 X 1/8
010	RM4451-2	8.	BHMS - 4-40 X 1/2
010	RM4451-4	6.	BHMS - 4-40 X 3/8
010	RM4618-1	4.	#8-32X1 3/4 SLOTTED FLAT HD
010	RM4669	2.	GUARD, FAN
010	RM5040-32	8.	STANDOFF-HEX - 4-40 - 3/8 LG.
010	RM5433-1	8.	HARDWARE-REAR MOUNTING
010	RM6338	1.	BRIDGE RECTIFIER 10A, 100V
010	RM6412	1.	ASS'Y . ESTOPCARD FOR UNICON
010	RM6424A	2.	SNAPTRACK, PC BOARD MTG.
010	RM6489	5.	GASKET, EMI COPPER FINGERS
010	RM6504	3.5	GASKET, EMI SPONGE W/MESH
010	RM6540	2.	PCB ASM, FEED DOG 3RD
010	RM6542	1.	PCB, ASM, 5V/5A DC-DC PS
010	RM6546	1.	BANNER#PFK20 F.O. MTG. KIT
010	RM6549	1.	GPTO22 Z240D10 SSR
010	RM6551	1.	EMI FILTER CORCOM 5VB1 5A/220V
010	RM6554	2.	MS-5-140- CHINCH COVER
010	RM6555	8.	140J-1 CHINCH T-BLOCK JUMPER
010	RM6556	1.	354802-GY/1/4 2POLES FUSE HLDR
010	RM6566	1.	PCB ASM, MINI CPU
070	RM6571	1.	PROGRAM ROM FOR CE2800-1

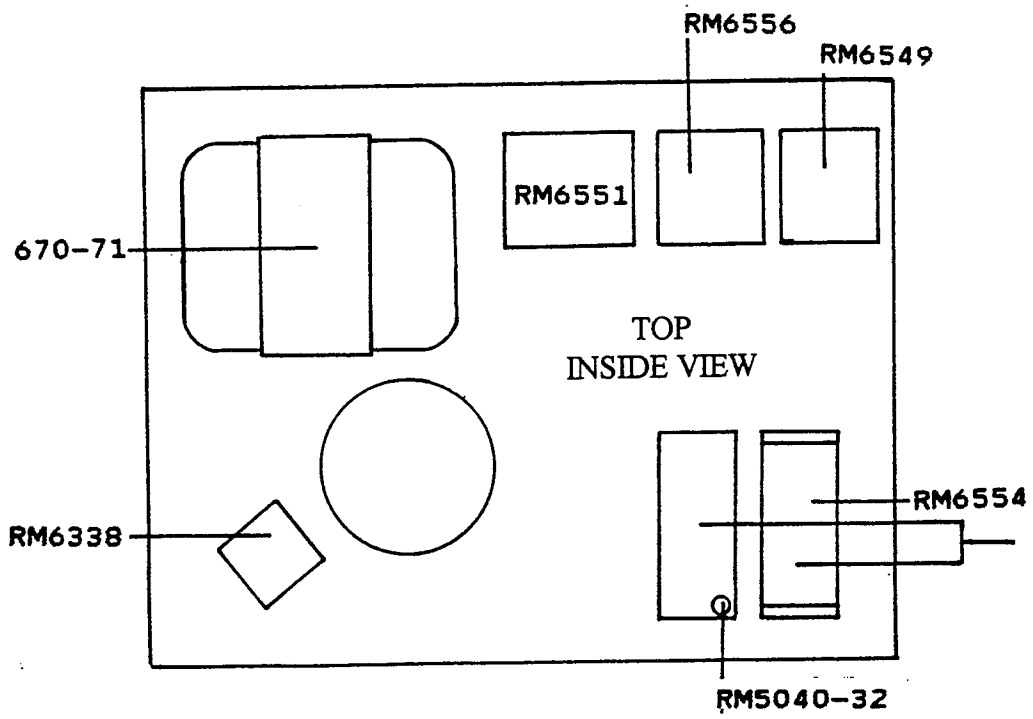

From the library of: Diamond Needle Corp

* FOR CABLE LOCATIONS REFER TO WIRING DIAGRAM LOCATED IN THE BACK OF THIS CATALOG.

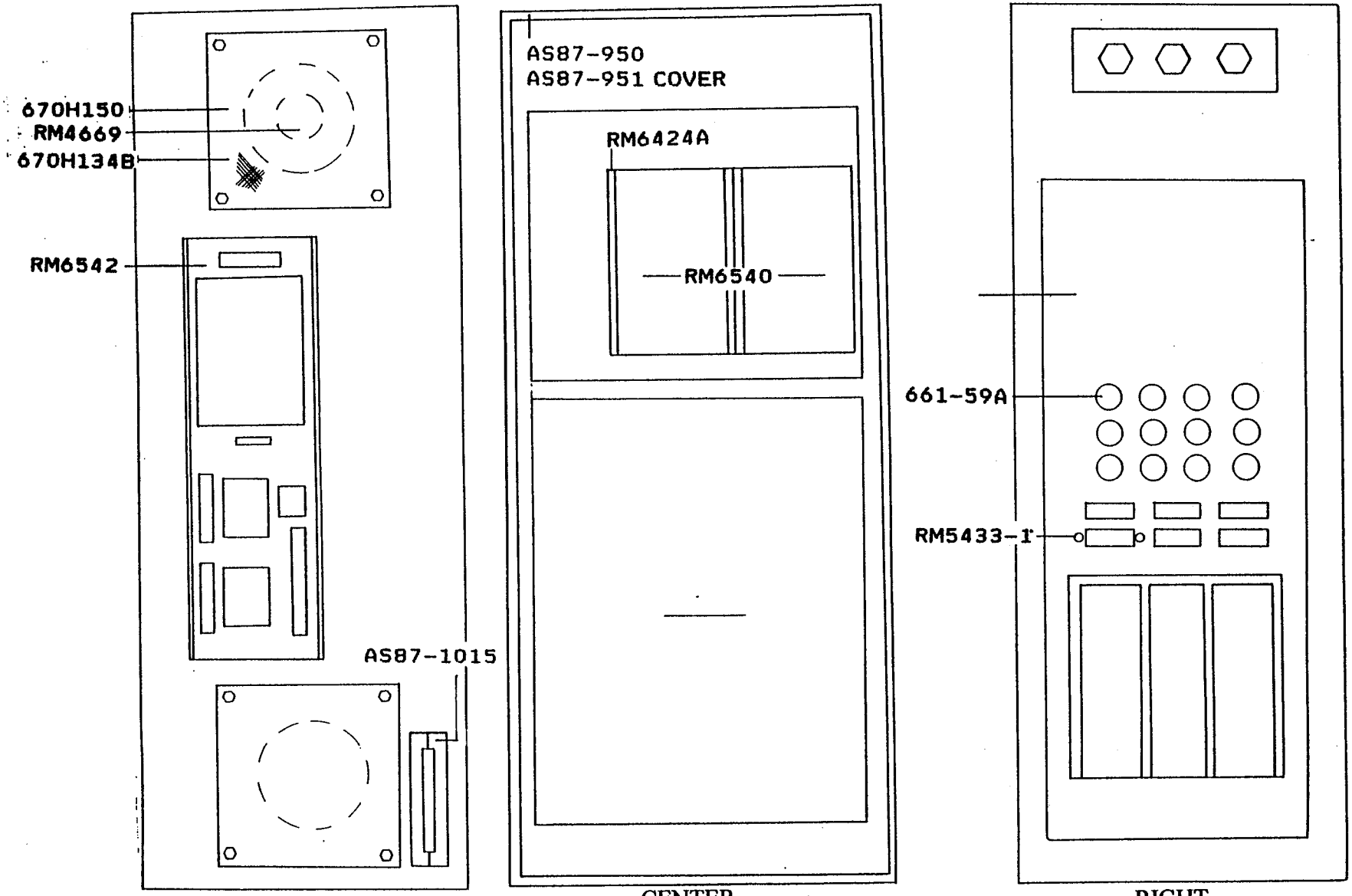

LEFT INSIDE VIEW

CENTER INSIDE VIEW

RIGHT INSIDE VIEW

From the library of: Diamond Needle Corp

PARENT NUMBER: 2884L9 DESCRIPTION: ASSEMBLY, ELECTRICAL

SEQ NO.	COMPONENT	QUANTITY PER	DESCRIPTION
090	22653B8	2.	#10-32 X 1/2 H.S.H.C.S. 28[
090	2884N4	1.	AS80/AS87/58B CONTROL DISPLA
090	AS87-1044	1.	BRACKET, DISPLAY
090	RM2719-2	4.	#10 X 2" P.H.S.M.S. (SLTD)
090	RM3293-6	2.	#10 F.W.
090	RM3993-3	2.	#10 H.S.L.W.
090	RM4671	1.	STAND, MOUNTING - DISPLAY

PARENT NUMBER: 2884N4 DESCRIPTION: AS80/AS87/58B CONTROL DISPLAY

SEQ NO.	COMPONENT	QUANTITY PER	DESCRIPTION
040	22829B	4.	SCREW
040	AS87-1004	1.	PLATE, EMI
040	AS87-1011	1.	ENCLOSURE, DISPLAY
040	AS87-1013	1.	PANEL-DISPLAY
040	AS87-1043	1.	SPACER, DISPLAY
040	AS87-1049	1.	ADAPTER, D-SUB
040	RM2747-1	24.	ITLW - 4
040	RM2984A	2.	#4-40 X 1/8 H.S.H.C.S.
040	RM4451-4	4.	BHMS - 4-40 X 3/8
040	RM4451-5	20.	BHMS - 4-40 X 1/4
040	RM5040-15	2.	5/16 O.D.X.140 I.D. SPACER
040	RM5040-32	4.	STANDOFF-HEX - 4-40 - 3/8 LG.
040	RM5040-34	6.	STANDOFF-HEX - 4-40 - 5/8 LG.
040	RM5040-35	4.	STANDOFF-HEX - 4-40 - 3/4 LG.
040	RM5433-1	2.	HARDWARE-REAR MOUNTING
040	RM6251A	1.	PCB ASM, AS87 EMI TERM. CPU
040	RM6254	1.	KEYBOARD PCB ASS'Y.
040	RM6287	1.	ASS'Y SHARP LCD
040	RM6489	2.1	GASKET, EMI COPPER FINGERS

From the library of: Diamond Needle Corp

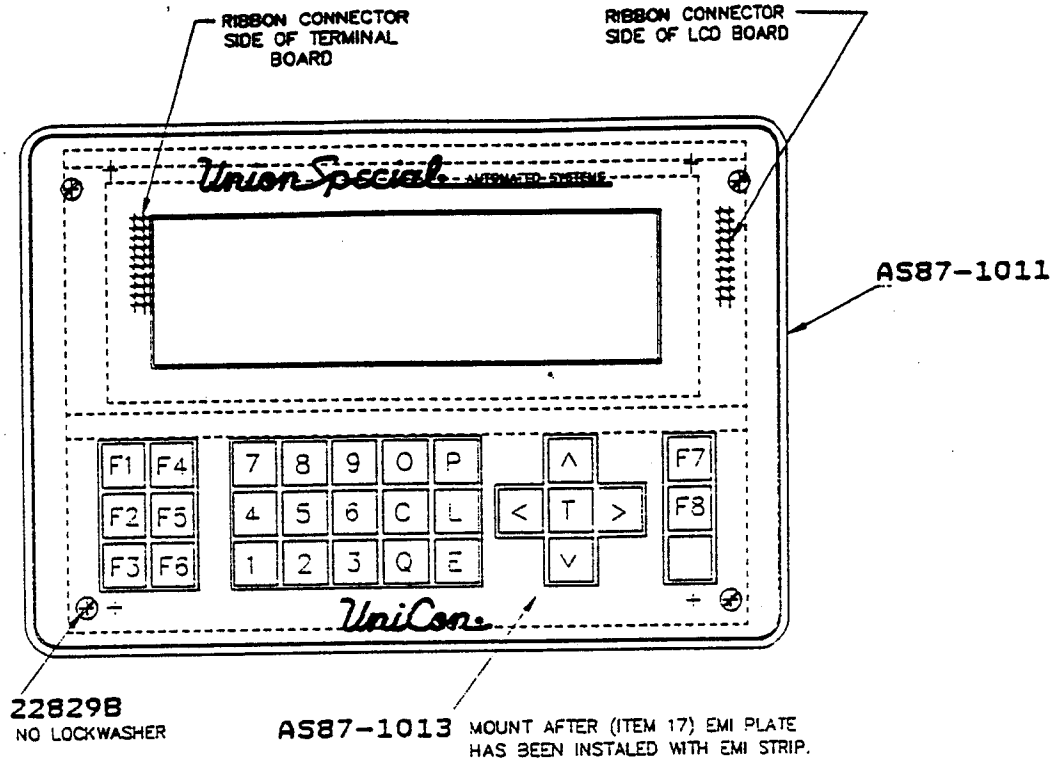

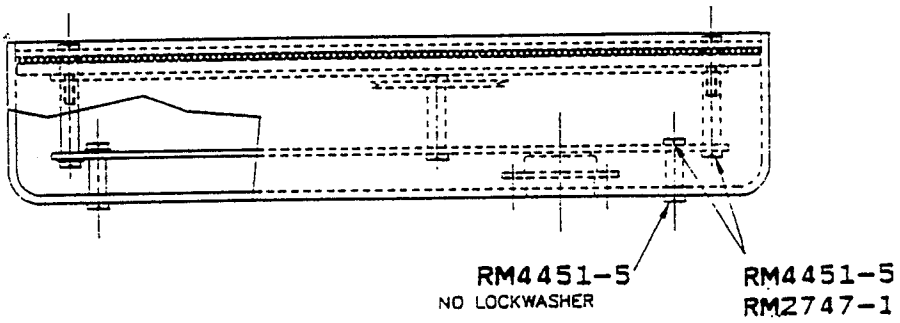

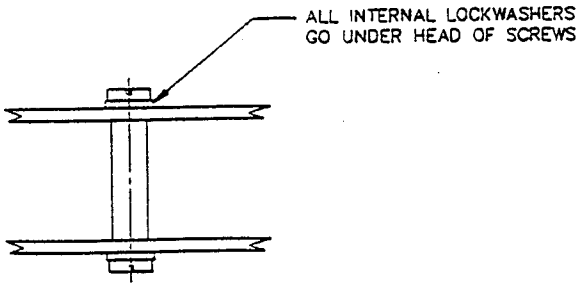

From the library of: Diamond Needle Corp

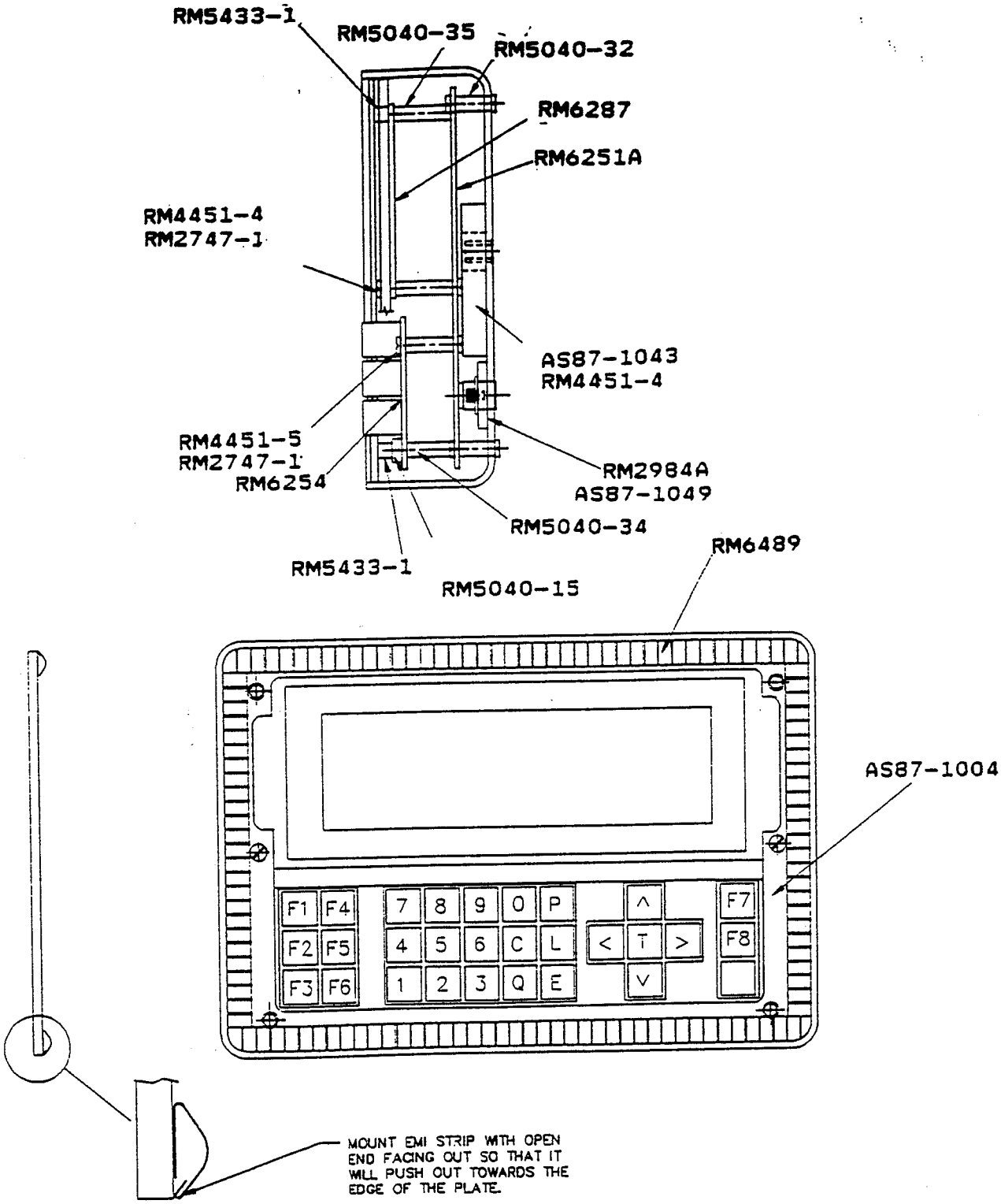

From the library of: Diamond Needle Corp

080	661-13A	4.	DOUBLE FACED TAPE
080	670B156	3.	SENSOR, THREAD BREAK
080	670E1040B	1.	CBL,THREAD BRK-LOOPER PCB 43"L
080	670E1090B	1.	CABLE, E-STOP/RESET-EXT.
080	670E1174	1.	CABLE-SYNC, SCALE, & STCH CNT
080	670E1175	1.	CBL.ASS'Y,LOOPER THREAD BREAK
080	670E1192	1.	CABLE, FEED DOG EYE SENS
080	670E1193	1.	CABLE, STITCH CNT EXT.
080	670E834A	1.	CABLE CPU TERMINAL INTERFACE
080	670E974N	1.	CABLE, I/O 15 COND D-RIBBON
080	670E974P	1.	CABLE, I/O 15 COND. D-RIBBON
080	670E974Q	1.	CABLE, I/O 15 COND. D-RIBBON
080	670E981B	1.	CABLE, TH'D.BREAK - EXT. (SBH)
080	670E998A	1.	CABLE,SPEED CONTROL-EXT. (SBH)
080	670J28	1.	ASSEMBLY, SEWING LIGHT & CABLE
080	670L63	1.	BOX, LOWER LOOPER T.B. PCB
080	AS72-737	3.	BRACKET, THREAD SENSOR
080	RM2791-1	3.	#8-32 HEX NUT
080	RM3293-5	3.	#8 F.W.
080	RM3993-4	3.	#8 H.S.L.W.
080	RM4414-2	3.	8-32 X 3/8 H.S.BUT.H.C.S.
080	RM6442	1.	ASS'Y., LOWER LOOPER, TB
080	RM6449-1	1.	BUSHING, STRAIN RELIEF-.220 D

REPORT DATE 1/05/95 BILL OF MATERIAL PAGE

PARENT NUMBER: 670J28 DESCRIPTION: ASSEMBLY, SEWING LIGHT & CABLE

SEQ NO.	COMPONENT	QUANTITY PER	DESCRIPTION
010	RM3352	2.	SPADE TERMINAL
010	RM6187-4	1.	LAMP, HOLOGEN-W/BASE-220VAC
	670J25B		BULB, HOLOGEN

From the library of: Diamond Needle Corp

ARENT NUMBER: 2884L10 DESCRIPTION: COVERS/WASTE REMOVAL

SEQ NO.	COMPONENT	QUANTITY PER	DESCRIPTION
010	22642K54	8.	CAP SCREW
010	22653B10	2.	#10-32 X 5/8" H.S.H.C.S.
010	22653B12	2.	#10-32 X 3/4 H.S.H.C.S.
010	661-184-1	29.	WELD NUT, SINGLE 5/16-18
010	666-197	4.	PINS
010	AS47-229CC	45.	WASHER, .375 ID, .625 OD, .025
010	AS62-1001	2.	PANEL, DOOR
010	AS62-1002	1.	PANEL, FIXED
010	AS62-1003	1.	PANEL, REAR
010	AS62-1005	1.	ANGLE, DOOR STOP
010	AS62-1006	1.	COVER, GUIDANCE
010	AS62-1007	1.	BRACKET, COVER
010	AS62-1008	1.	KIT, WASTE REMOVAL - CE
010	AS70-85	8.	BRACKET, FRAME COVER
010	AS73-903-2	18.	1/4-20 HALF ROUND NUT
010	LA323	3.	COVER CAUTION LABEL
010	LA324	2.	COVER CAUTION LABEL
010	LA325	3.	VOLTAGE CAUTION LABEL
010	LA326	5.	COVER CAUTION LABEL
010	LA328	4.	KEEP HANDS FREE LABEL
010	LA336	1.	NAMEPLATE, MACHINE
010	LA383	1.	PLATE-AUTOMATED SYSTEM (PINS: 666-197)
010	RM2785B	10.	HOSE, VACUUM
010	RM2791-3	8.	1/4-20 HEX NUT
010	RM2791-7	3.	#10-32 HEX NUT
010	RM3162-2	16.	1/4-20 X 3/4 H.H.C.S.
010	RM3162-6	8.	1/4-20 X 1/2 H.H.C.S.
010	RM3211-13	4.	1/2-13 HEX JAM NUT
010	RM3211-3	4.	3/8-16 HEX JAM NUT
010	RM3289-2	17.	#10-32 X 5/8 B.H.M.S.
010	RM3293-2	8.	5/16 F.W.
010	RM3293-3	4.	3/8 F.W.
010	RM3293-4	4.	1/2 F.W.
010	RM3293-6	14.	#10 F.W.
010	RM3993-2	4.	1/2 H.S.L.W.
010	RM3993-3	5.	#10 H.S.L.W.
010	RM3993-5	8.	5/16 H.S.L.W.
010	RM3993-8	8.	1/4 H.S.L.W.
010	RM4572-1	4.	HINGE - DOOR PANEL

LA328

LA325

LA324

LA323

From the library of: Diamond Needle Corp

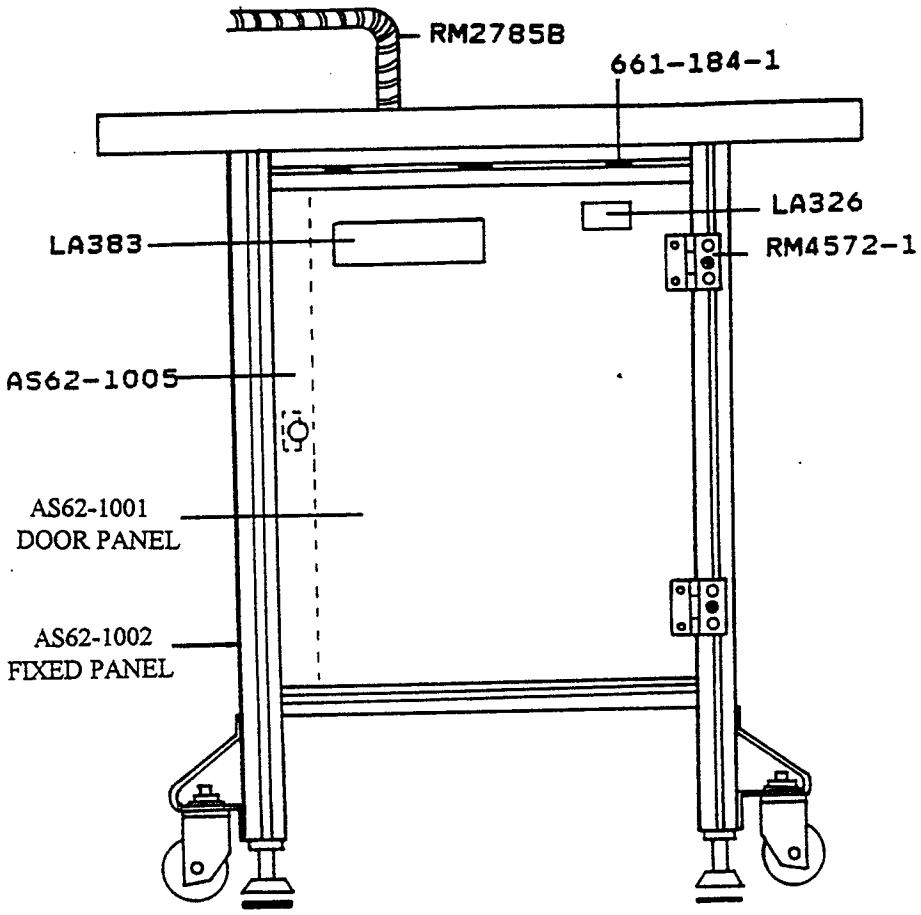

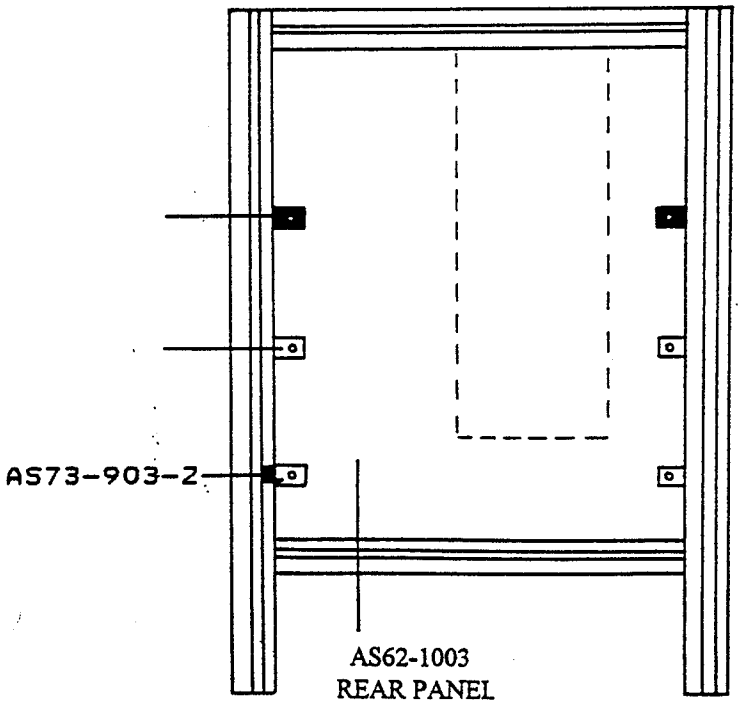

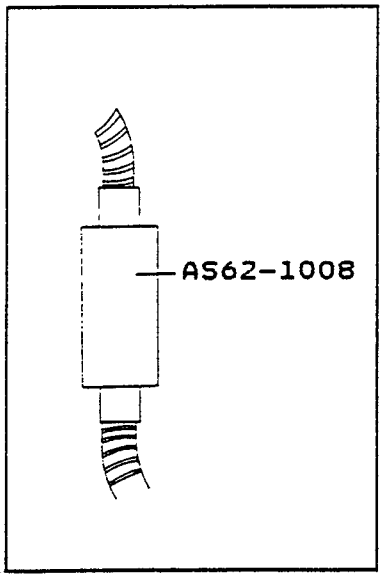

From the library of: Diamond Needle Corp

ARENT NUMBER: 2884L11 DESCRIPTION: ASSEMBLY, PACK & SHIP - CE

SEQ NO.	COMPONENT	QUANTITY PER	DESCRIPTION
010	6-151-30	1.	MATERIAL, PACKING - 93800BHA

From the library of: Diamond Needle Corp

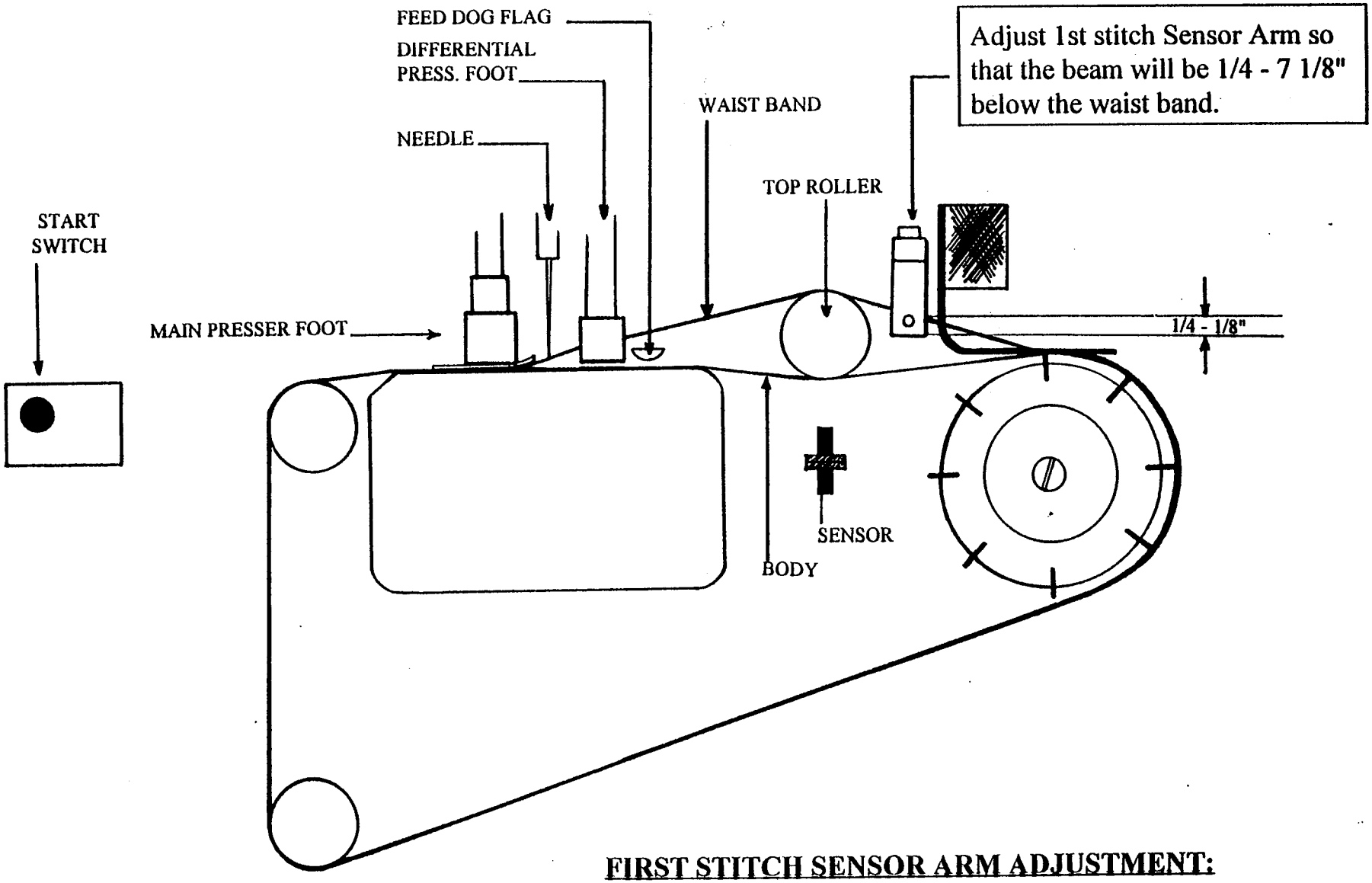

FIRST STITCH SENSOR ARM ADJUSTMENT:

From the library of: Diamond Needle Corp

COARSE ALIGNER PERIPHERALS SET-UP

(3) PROGRAMMING MODE > ACCESS CODE > (1) MECHANIC > (5) PERIPHERAL

1. COARSE_UN_V = 500
2. COARSE_OUT_V= 500
3. COARSE_FEED = 30

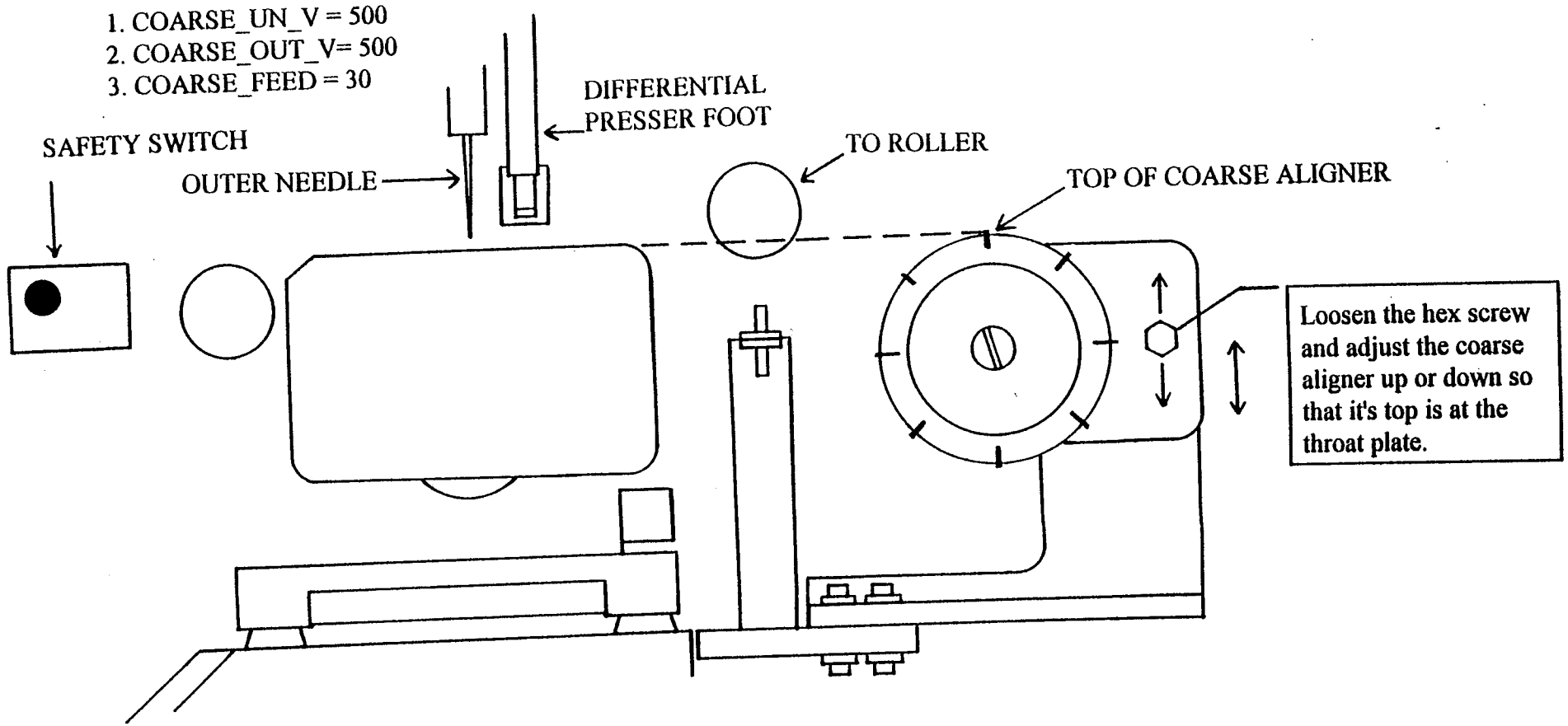

COARSE ALIGNER ADJUSTMENT:

From the library of: Diamond Needle Corp

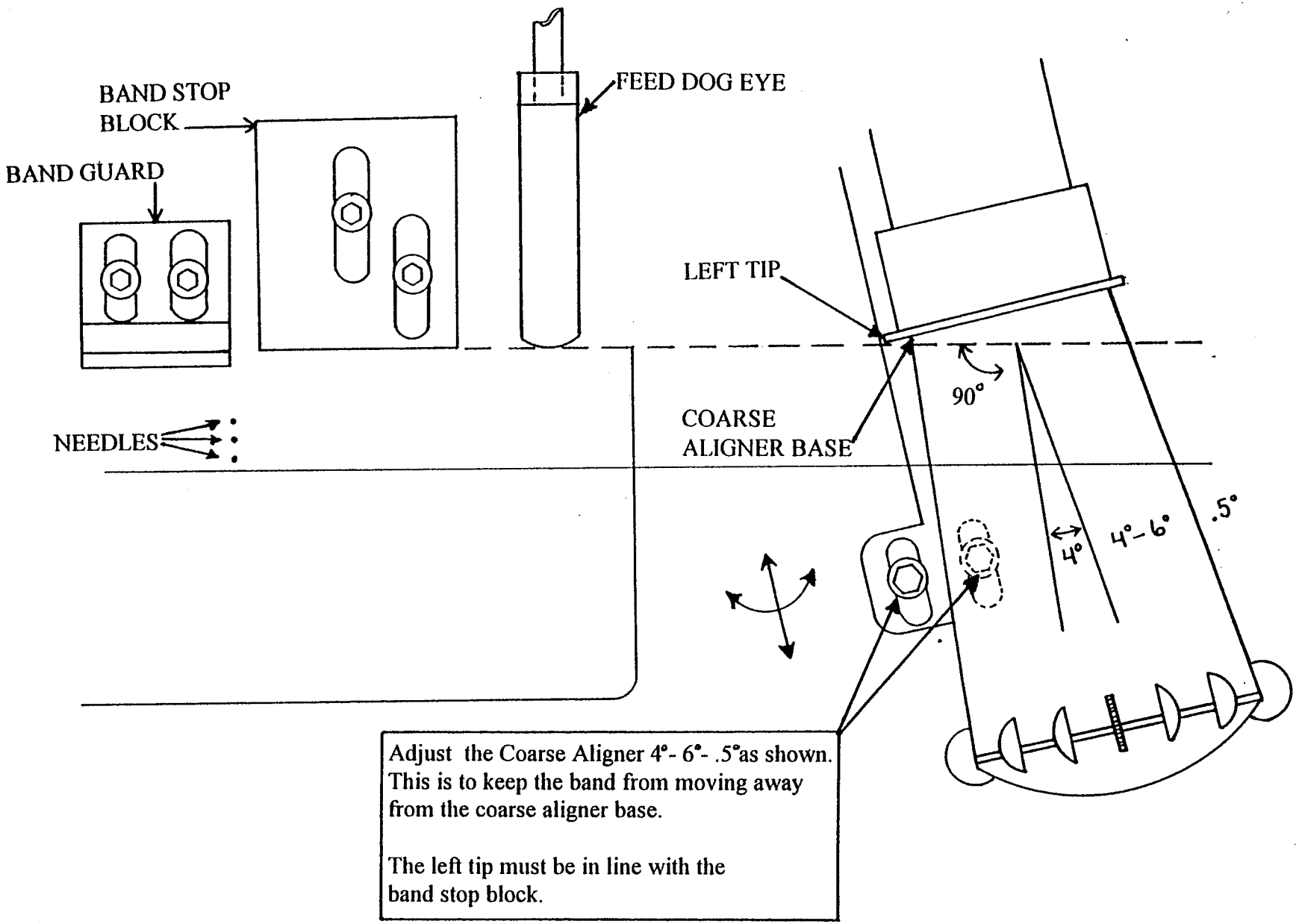

COARSE ALIGNER ADJUSTMENTS CONT'

From the library of: Diamond Needle Corp

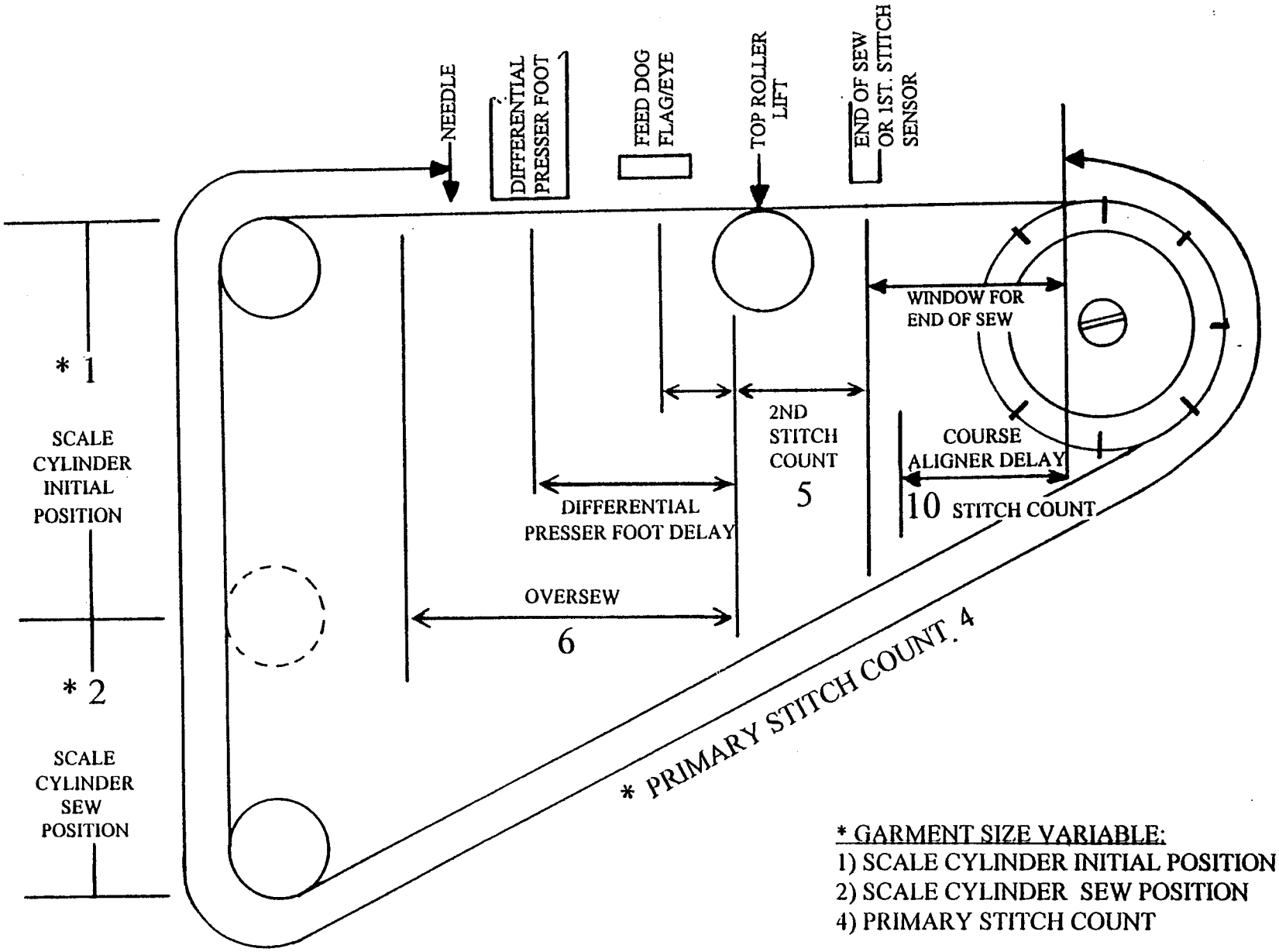

* GARMENT SIZE VARIABLE:
1) SCALE CYLINDER INITIAL POSITION
2) SCALE CYLINDER SEW POSITION
4) PRIMARY STITCH COUNT

GARMENT STYLE VARIABLE ADJUSTMENT:

From the library of: Diamond Needle Corp

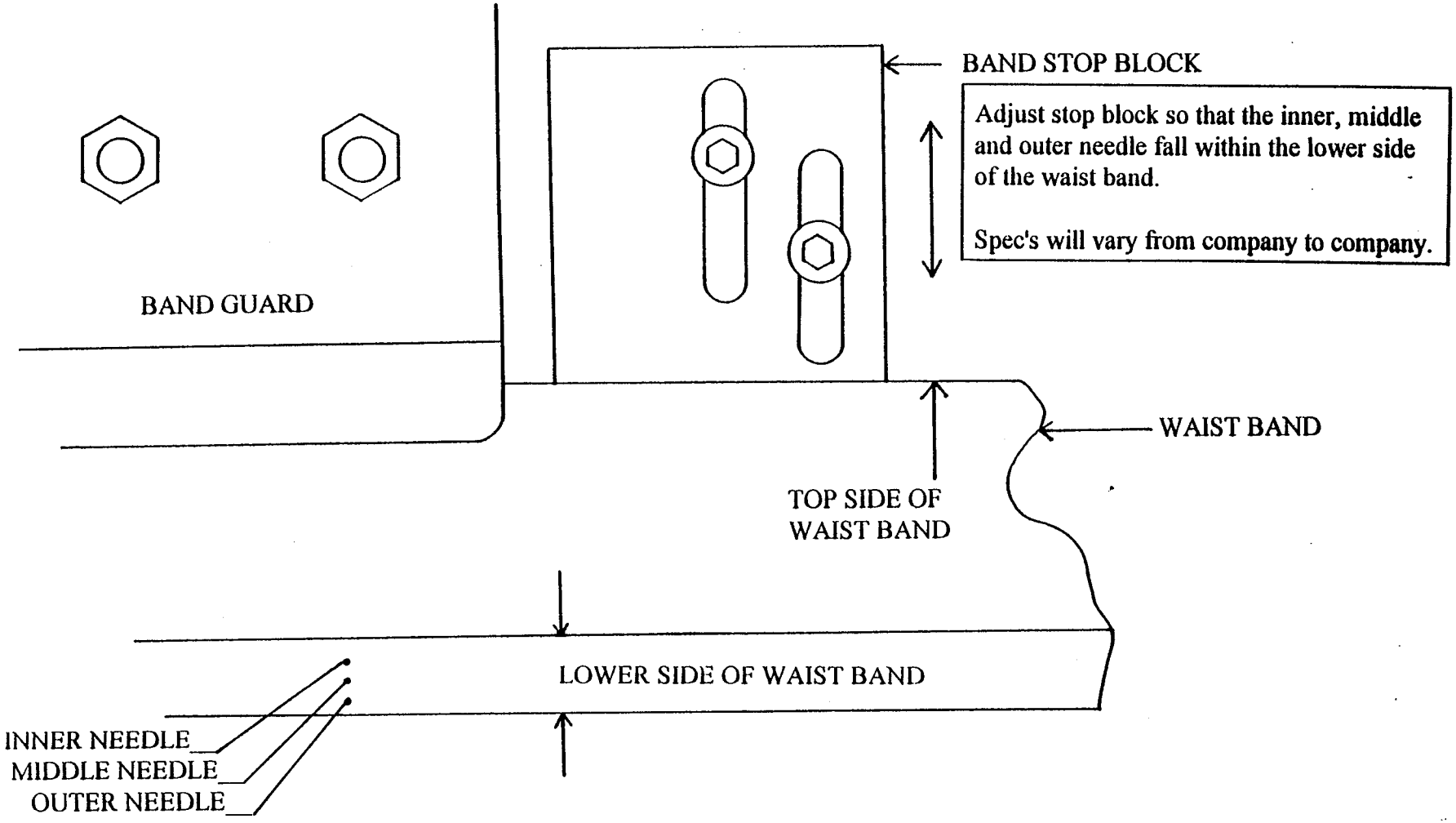

STOP BLOCK ADJUSTMENT:

From the library of: Diamond Needle Corp

ELECTRICAL CONNECTION DIAGRAM FOR PNEUMATIC ASSEMBLY

DPFOT	TM PLEX	KLIPP	PFOOT	TOP ROLL. OUT	GARM HOLD	CAR BRK

LEFT VALVE BANK

CARR. UP

KNT HR	FLT HR	UN-LOAD ER	TOP ROLL LIFT	1ST ST. DN.	TWIPE	PURG

RIGHT VALVE BANK

CARR. DOWN

LEFT OUTPUT CARD

OUT 1 DIFF. P. FOOT
OUT 2 TEMPLEX / PURGE
OUT 3 KLIPP-IT
OUT 4 PRESSOR FOOT
OUT 5 GARMENT HOLD
OUT 6 CARRIAGE DOWN
OUT 7 CARRIAGE UP
OUT 8 CARRIAGE BREAK

RIGHT OUTPUT CARD

OUT 1 KNTHR
OUT 2 FLTHR
OUT 3 TOP ROLLER LIFT
OUT 4 LST STITCH DOWN
OUT 5 TWIPE
OUT 6 TROUT
OUT 7 UNLOADER
OUT 8 - - - - - -

INPUT BOARD CONNECTIONS

NO. 1	SWITCH / START SWITCH	670E1189
NO. 2	START FOOT SWITCH	670B32
NO. 3	CA EYE	RM6227B
NO. 4	SCALE HOME POSITION	SEE SCALE
NO. 5	BAND PRESSENT SENSOR	670B172
NO. 6	1ST STITCH SENSOR	670B189
NO. 7	KLIPP-IT HOME	SEE SEW HEAD
NO. 8	SEW HEAD STOP SIGNAL	670E1190

From the library of: Diamond Needle Corp

CONTROL BOX PANEL

PANEL OUTSIDE

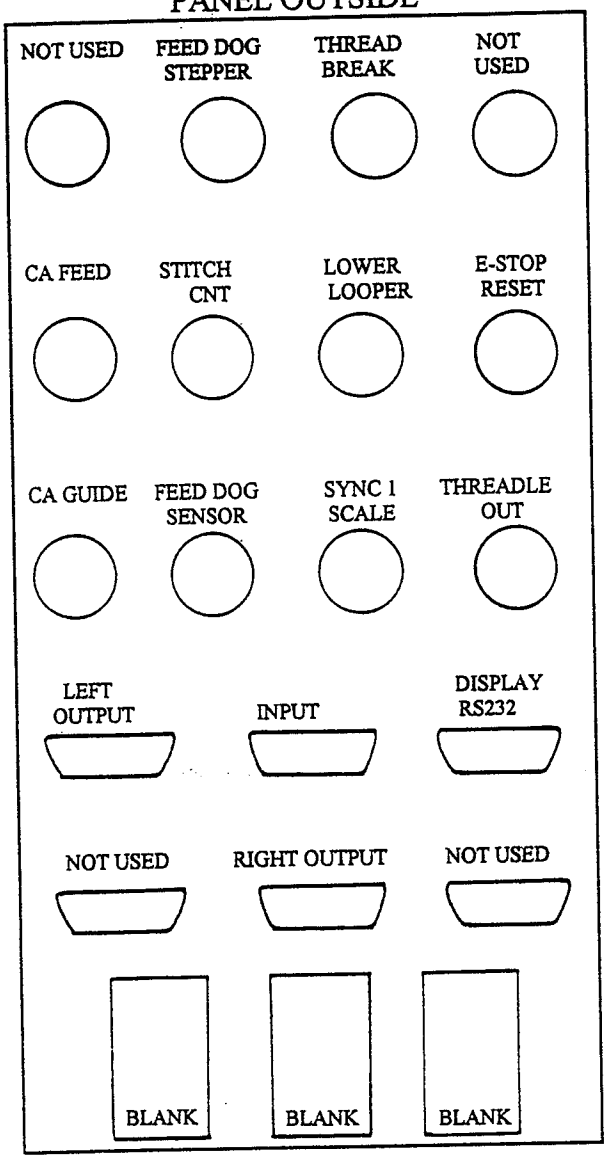

PANEL INSIDE

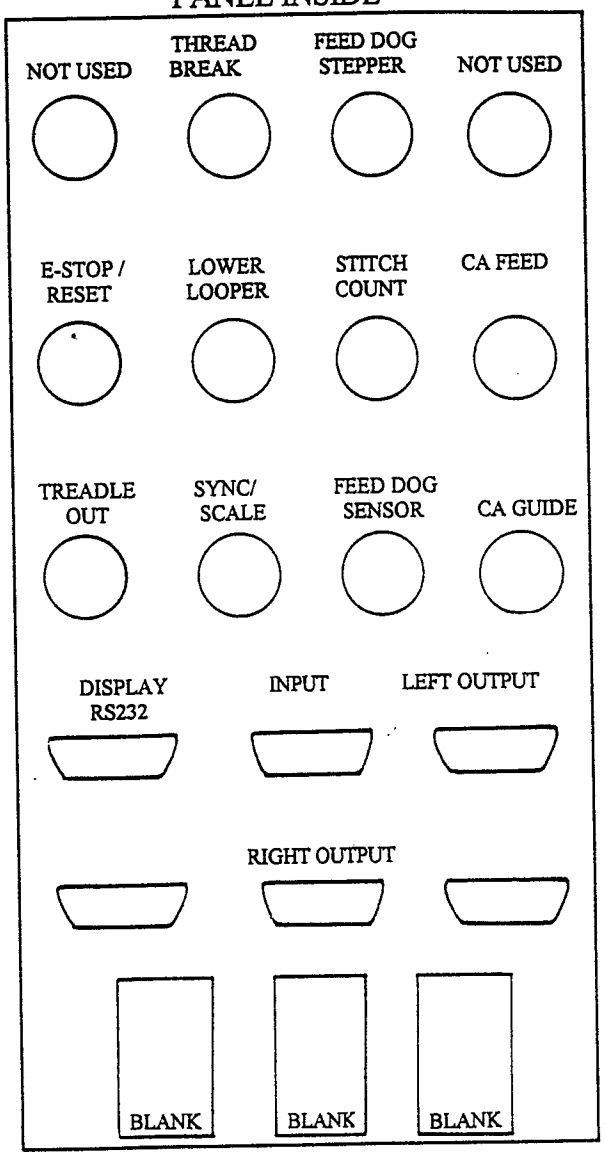

From the library of: Diamond Needle Corp

STEPPER CARD

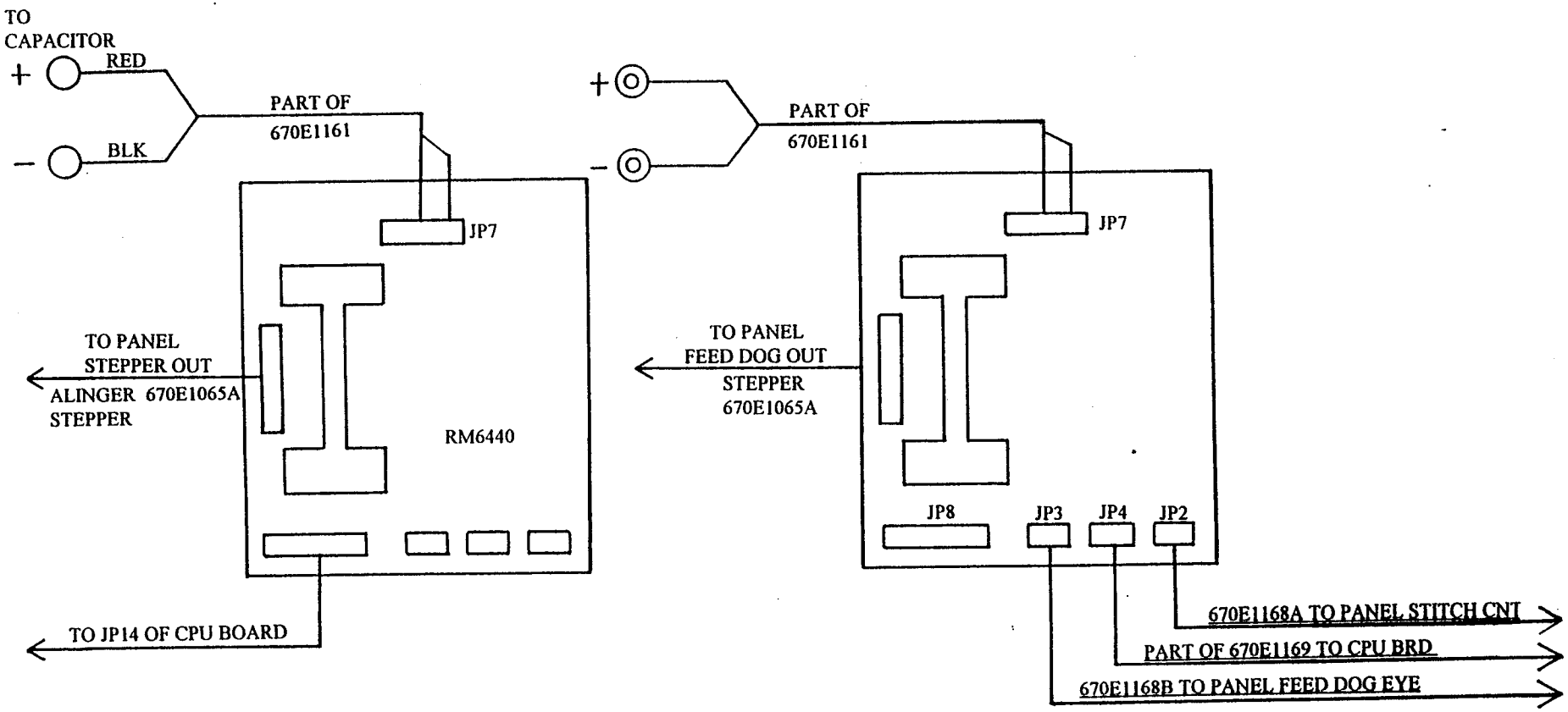

From the library of: Diamond Needle Corp

CPU CONNECTIONS

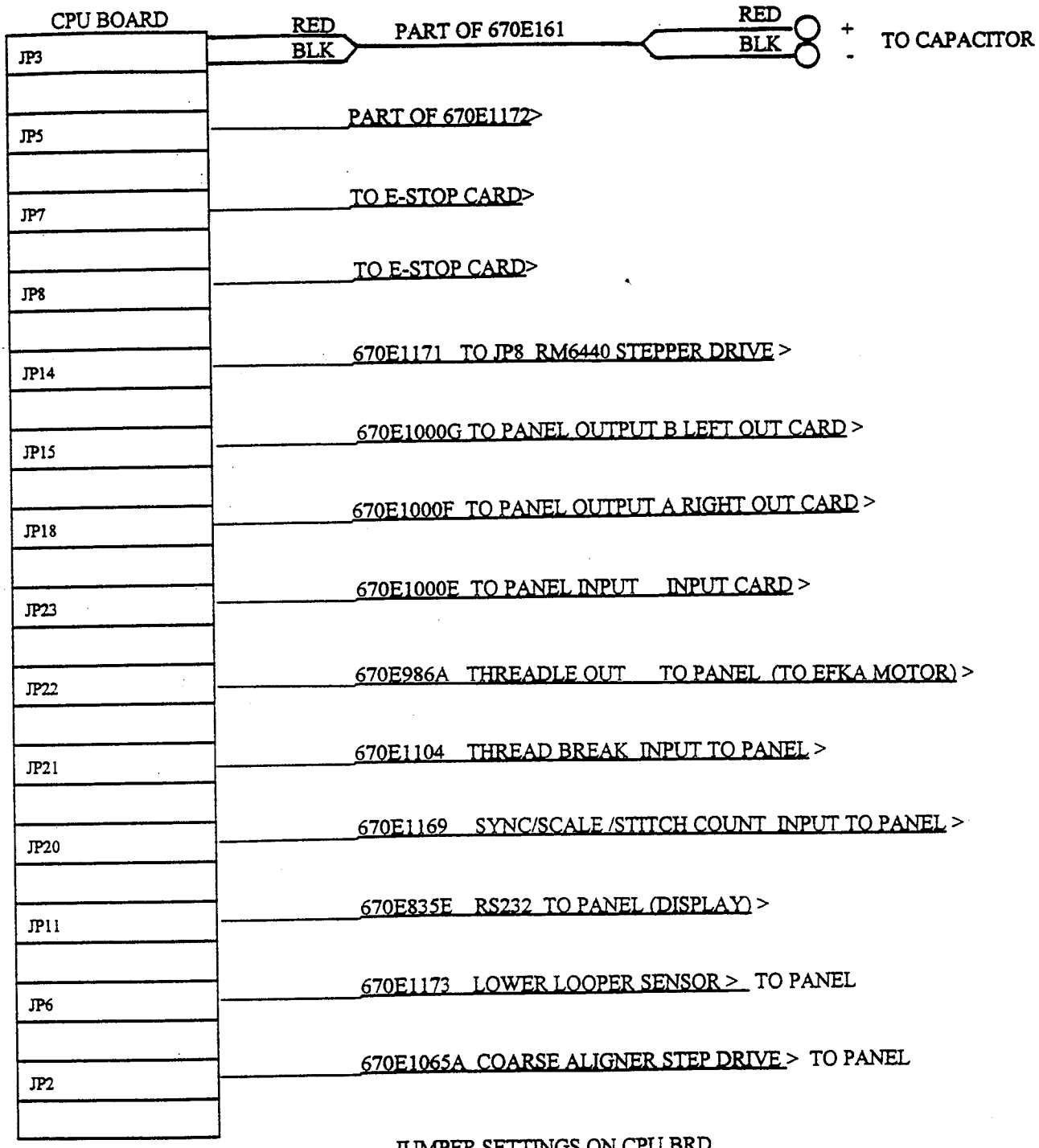

JUMPER SETTINGS ON CPU BRD

PS1 = H	PS5 = +12	PS9 = +5	PS13 = SYNC2
PS2 = CK0	PS6 = 1	PS10 = NO JUMPE	PS14 = NC
PS3 = INT3	PS7 = 1	PS11 =+5	PS15 = D
PS4 = +12	PS8 = TOL	PS12 = x4	PS16 = +5

From the library of: Diamond Needle Corp

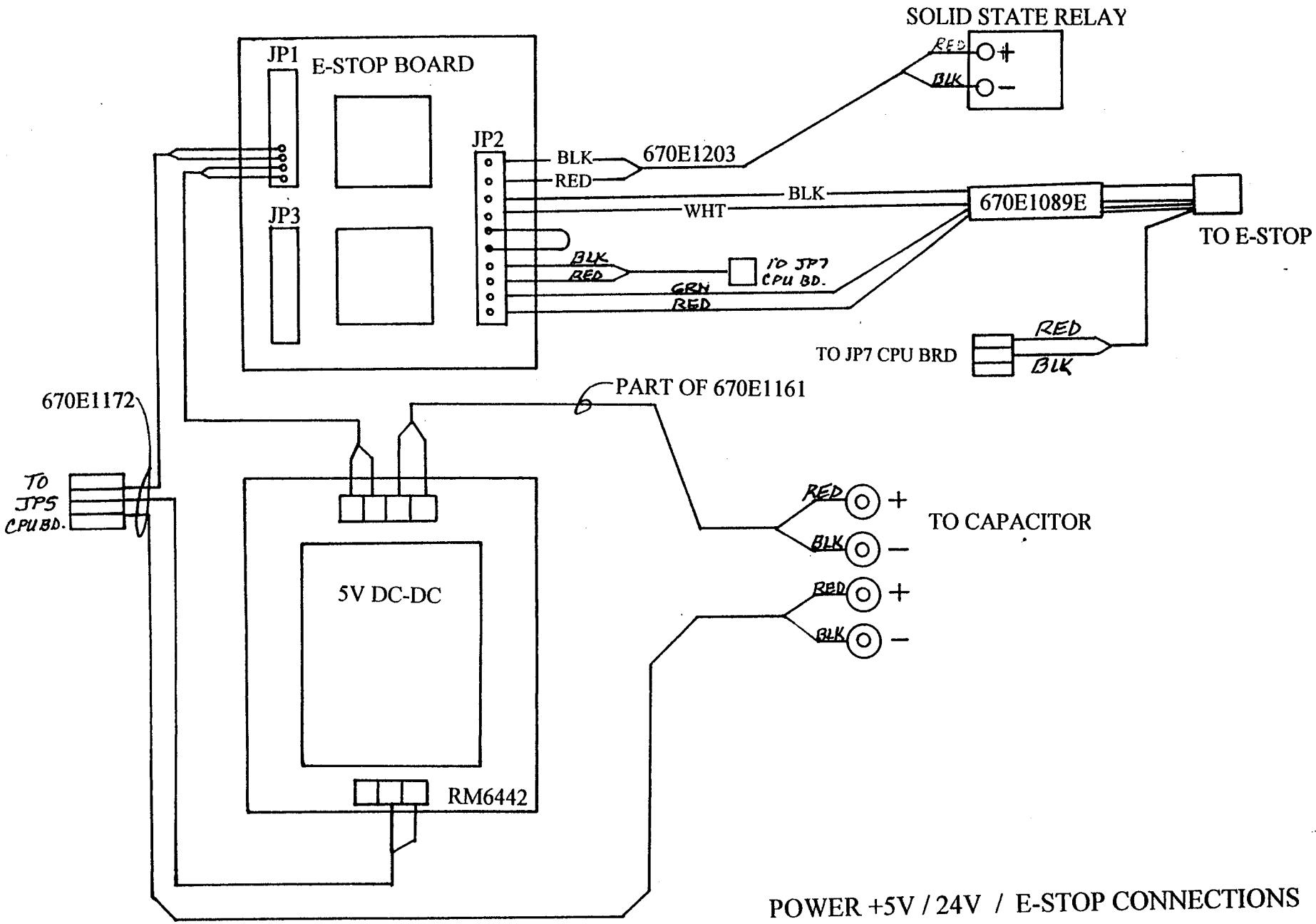

POWER +5V / 24V / E-STOP CONNECTIONS

From the library of: Diamond Needle Corp

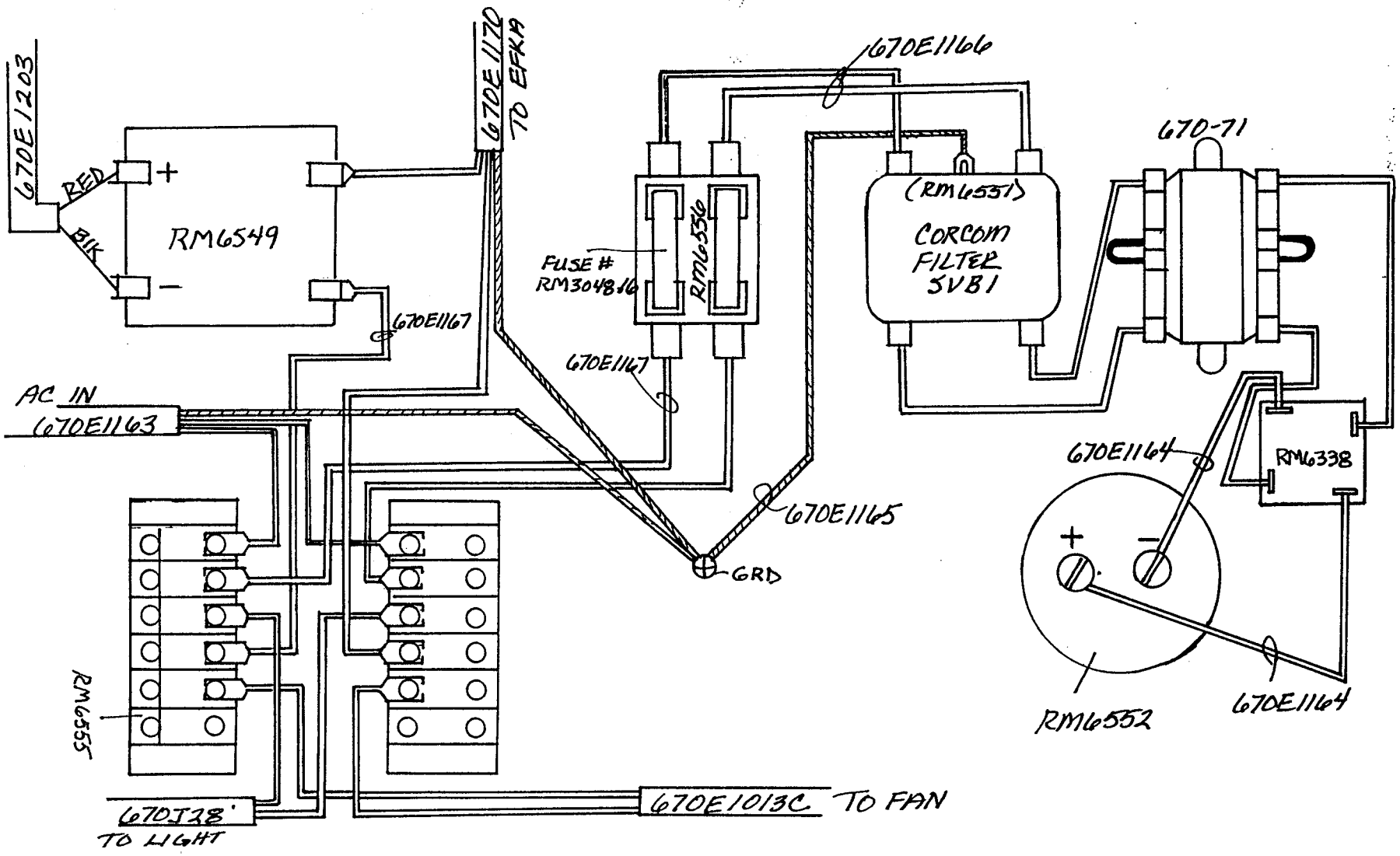

From the library of: Diamond Needle Corp